LEGEND 35.5 OWNER'S MANUAL
TABLE OF CONTENTS

I. INTRODUCTION

- A. Brief History
- B. Warranty Card
- C. Welcome To The Hunter Marine Family
- D. Glossary of Sailing Terms (5 pages)

II. GENERAL HANDLING & OPERATION

- A. Pre-departure Check List
- B. Float Plan
- C. Closing Up Your Boat After Sailing
- D. For Safe Boating
- E. General Handling & Operation (4 pages)

III. SAILS & RIGGING

- A. Legend 35.5 Sail Plan - dwg. #H35A2613
- B. Tuning The Conventional Fractional Rig
- C. Dbl. Spreader Fractional Rig W/ Swept Back Sprdrs - dwg. #GEN2601A
- D. Isomat Rigging Assembly - dwg. #GEN2603A
- E. Isomat Spreader Detail - dwg. #GEN2607A
- F. Running Rigging - dwg. #H35.5A2614
- G. Mast Steph Detail - dwg. #H35.5A2615
- H. Legend 35.5 Furling System - dwg. #H35A2618
- I. Legend 35.5 Furling - dwg. #H35.5A2617
- J. Production Running Rigging - dwg. #H35A2637
- K. Boom & Reef Layout, Isoreef - dwg. #GEN2609A
- L. Traveler Detail - dwg. #GEN2611A
- M. Legend 35.5 Rigging Specifications
- N. Legend 35.5 Deck Layout
- O. Legend 35.5 Deck Layout - dwg. #H35A2633
- P. Legend 35.5 Rigging Lengths - dwg. #GEN2603A
- Q. Spinnaker Package Components - dia. #H35B2622
- R. Spinnaker Package - dwg. #H35A2621
- S. Notes on the Dutchman System for Rigging (2 pages)
- T. Dutchman System B Owner's Manual (21 pages)

LEGEND 35.5 OWNER'S MANUAL
TABLE OF CONTENTS

IV. ELECTRONICS

- A. Marinco Shore Power Cable Set Instruction Sheet
- B. Autohelm ST-50 Instruments Operation
- C. Autohelm ST-50 Instruments Installation
- D. Entertainment Center Owner's Manual
- E. VHF Radio

V. GALLEY/HEAD SYSTEMS

- A. Water System Operation
- B. SeaWard CNG Stove Instructions
- C. Manual Marine Toilet
- D. Automatic Water System Pump
- E. Electric Water Heaters
- F. Self Priming Macerator Pump
- G. Grohe Faucets - Speciality, Centerset, Kitchen & Bar.

VI. SPECIFICATIONS & TECHNICAL INFORMATION

- A. Legend 35.5 Interior Plan - dwg. #H352624A
- B. Legend 35.5 Thru-hull Loc's - dwg. #H35A2634
- C. Legend 35.5 Headliner Schematic - dwg. #H352638
- D. Legend 35.5 Pan Schematic - dwg. #H35A2642
- E. Legend 35.5 Supply Water System- dwg. #H35A2640
- F. Legend 35.5 Waste Water System - dwg. #H35A2641
- G. Legend 35.5 Head Plumbing Diagram- dwg. #GENA2620
- H. Legend 35.5 Auto Bilge Pump Layout - dwg. #GEN2613A
- I. Legend 35.5 Fuel System - dwg. #H35A2639
- J. Legend 35.5 Cushion Storage - dwg. #35.5A2619
- K. Legend 35.5 Light Bulb Specifications
- K. Pumps Strainers and Filters

VII. MAINTENANCE

- A. Instructions For Preparation For Bottom Painting
- B. Teak Care

LEGEND 35.5 OWNER'S MANUAL
TABLE OF CONTENTS

Maintenance Continued.

C. Maintenance (3 pages)

1. Engine, Transmission and Drivetrain
2. Steering
3. Electrical Systems
4. Plumbing Systems
5. Fuel System
6. General Care/Fabric Care
7. Winch Maintenance
8. General Hardware Maintenance

D. Maintenance Electrolysis & Galvanic Protection

E. Alignment Procedure

F. Alignment Diagram - dwg. #GEN2619A

G. Storage & Winterization (2 pages)

H. Edson Pedestal Maintenance Guide

I. Marine Rigging

J. Barient Service Manual (10 pages)

VIII GENERAL INFORMATION & WARRANTY CARDS

A. Edson Internatinal Registration Card

B. UK Sailmakers/Warranty Registration Card

C. Hunter Marine Limited Warranty

D. Hunter Five Year Bottom Blister Limited Warranty

E. Compass Warranty & Information

F. Nationwide Battery

G. Seaward Products Information & Warranty

H. Isomat Spars

I. Racor Fuel Filter Information

J. Perko Water Strainer

K. Grohe America Faucets

L. Foss Rudder Information

M. Lewmar Port Light Instructions

N. Lewmar Portlight Screen

O. Bilge Pump

P. Battery Charger's Owner's Manual

LEGEND 35.5 OWNER'S MANUAL
TABLE OF CONTENTS

IX BOATING SAFETY

A. Coast Guard Auxiliary Public Education
B. Courtesy Marine Examination
C. Federal Requirements for Recreational Boats
D. ASA Pamphlet
E. Boating Basics - Blueprint For Safe Boating

X. ENGINE INFORMATION & WARRANTY

A. Yanmar Owner's Manual
B. Yanmar Warranty Card
C. Mack Boring Bulletins
D. Yanmar On-Board Spare Parts Kit
E. Yanmar Diesel Engine Delivery Report

HUNTER MARINE'S OWNER AND FOUNDER
WARREN R. LUHRS
BRIEF HISTORY

Born in 1944 in East Orange, New Jersey, Warren R. Luhrs' ancestry goes back to his Great-grandfather, Henry, who helped pioneer railroading and clipper ships in America, and to his great-uncle, John, who helped build the famous St. Petersburg-to-Moscow railroad for Czar Alexander II.

Henry Luhrs owned shares in twenty-two different ocean-going vessels - barks, brigs and schooners - and was principal owner of the bark, "Sophia R. Luhrs", named after his wife. He was also a partner with Albert Sprout, who managed a shipyard in Melbridge, Maine, where the "Sophia R. Luhrs" was built.

The Luhrs' family sea tradition was carried on during the Great Depression by Warren Luhrs' father, Henry, who worked at a small boat manufacturer in Morgan, New Jersey, and later started his own company. When war broke out in Europe, the Coast Guard asked Henry Luhrs to repair their boats and install ice sheathing on their bows.

After World War II, Henry built 27-foot fishing boats and in 1948 began to construct custom-built pleasure craft. He then turned to skiffs and in 1952 incorporated as Henry Luhrs Sea Skiffs. He constructed lap strake sea skiffs using assembly-line techniques. Henry personally "shook down" his prototypes with family trips up the Hudson River to Lake Champlain.

The sea skiff is a class of boat which has been very popular, owing to its seaworthiness. It features a sharp bow, which reduces pounding in surf or choppy seas, and a hull whose forward section is rounded below the water line to increase stability in rough water or a following sea. Such skiffs can either be smooth-sided or of lapstrake construction.

Henry Luhrs' basic philosophy was to emulate the late Henry Ford in building an inexpensive boat for the average man, thus enabling him to enjoy the luxury of boating. He was both designer and engineer, creating innovative and progressive new models. He designed the change in the line of the bow from straight to curved at a time when all boats were being built with the straight square effect. It is believed he was also the first designer-builder to popularize a small boat with a fly-bridge.

In 1960, Luhrs acquired the Ulrichsen Boat Company, Marlboro, New Jersey. It was here, to, that the Luhrs' Alura Fiberglass Division was located. In 1965, Henry sold his company to Bangor Arrostook Railroad, which was to become the recreational conglomerate, Bangor-Punta. It was also during this period that Silverton of Tom's River, New Jersey was purchased by John and Warren Luhrs.

Today, Warren R. Luhrs and his brother John, own Hunter Marine Corporation, Silverton Marine Corporation, Mainship Motor Yachts and Luhrs Fishing Boats with its Alura Division. Hunter Marine produces sailboats while the other companies produce powerboats.

GLOSSARY OF SAILING TERMS

Terms which are referred to in the text without a full explanation are included in the glossary. Some other terms which are clearly defined in the book are not included.

A

Aback: describes a sail when the wind strikes it on its lee side.
Abaft: towards the boat's stern.
Abeam: at right angles to the *center-line* of the boat.
Aft: at or near the stern.
Amidships: the center of the boat, *athwartships* and fore and aft.
Anti-fouling: a poisonous paint compound used to protect the underwater part of a hull from marine growths.
Apparent wind: the direction and speed of the wind felt by the crew. It is a combination of *true wind* and that created by the movement of the boat.
Astern: behind the boat; to go astern is to drive the boat in reverse.
Athwartships: at right angles to the fore-and-aft line of the boat.

B

Back: when a wind backs, it shifts anticlockwise.
Back a sail: to sheet it to windward so that the wind fills on the side that is normally to *leeward*.
Backstay: a stay that supports the mast from aft and prevents its forward movement.
Baggywrinkle: rope, teased out, plated together and wound around *stays, shrouds* etc., to prevent chafing.
Ballast: extra weight, usually lead or iron, placed low in the boat or externally on the keel to provide stability.
Ballast keel: a mass of ballast bolted to the keel to increase stability and prevent a keel boat from capsizing.
Batten: a light, flexible strip, fed into a batten pocket at the *leech* of the sail to support the *roach*.
Beam: 1, the maximum breadth of a boat; 2, a transverse *member* which supports the deck; 3, on the beam means that an object is at right angles to the *center-line*.
Bear away: to steer the boat away from the wind.
Bearing: the direction of an object from an observer, measured in degrees true or magnetic.
Beat: to sail a zigzag *course* towards the wind, *close-hauled* on alternate *tacks*.
Belay: to make fast a rope around a *cleat*, usually with a figure-of-eight knot.
Bend: 1, to secure a sail to a *spar* before hoisting; 2, to connect two ropes with a knot.
Berth: 1, a place occupied by a boat in harbour; 2, to moor a boat; 3, a sleeping place on board.
Bight: a *bend* or loop in a rope.
Bilge: the lower, round part inside the hull where water collects.
Block: a pulley in a wooden or plastic case, consisting of a *sheave* around which a rope runs. It is used to change the direction of pull.
Boot-topping: a narrow coloured stripe painted between the bottom paint and the *topside* enamel.
Bottlescrew: see Rigging screw.
Broach: when a boat *running* downwind slews broadside to the wind and *heels* dangerously. It is caused by heavy following seas or helmsman's error.
Broad reach: the point of sailing between a beam *reach* and a *run*, when the wind blows over the *quarter*.
Bulkhead: partition wall in a boat normally fitted *athwartships*

C

Catamaran: a sailing boat with twin hulls, connected by crossbeams, developed from Polynesian craft.
Catboat: a boat with a single sail.
Caulk: to make the seams between wooden planks watertight by filling with cotton, oakum or a compound.
Cavitation: the formation of a vacuum around a propeller, causing loss in efficiency.
Center-board: a board lowered through a slot in the *keel* to reduce *leeway*.
Center-line: center of the boat in a fore and aft line.
point at which all the forces acting on the sails are concentrated.
Center of lateral resistance (CLR): the underwater center of pressure about which a boat pivots when changing *course*.
Chain pawl: a short lug which drops into a toothed rack to prevent the anchor chain running back.
Chain plate: a metal plate bolted to the boat to which the *shrouds* or *backstays* are attached.

GLOSSARY OF SAILING TERMS

Chart datum: reference level on a chart below which the tide is unlikely to fall. Soundings are given below chart datum. The datum level varies according to country and area.
Chine: the line where the bottom of the hull meets the side at an angle.
Claw ring: a fitting, which slips over the boom like a claw, to which the main *sheet* is attached after *reefing* the mainsail.
Cleat: a wooden, metal or plastic fitting around which a rope is secured.
Clevis pin: a locking pin through which a split ring is passed to prevent accidental withdrawl.
Clew: the after, lower corner of a sail where the foot and *leech* meet.
Close-hauled: *the point of sailing* closest to the wind; see also *Beat.*
Close reach: *the point of sailing* between *close-hauled* and a beam *reach,* when the wind blows forward of the *beam.*
Close-winded: describes a boat able to sail very close to the wind.
Coamings: the raised structure surrounding a *hatch,* cockpit etc., which prevents water entering.
Contrail: a trail of condensation left behind a jet aircraft, giving weather clues.
Cotter pin: soft, metal pin folded back on itself to form an eye.
Course: the direction in which a vessel is steered, usually given in degrees: true, magnetic or compass.
Cringle: 1, a rope loop, found at either end of a line of *reef* points; 2, an eye in a sail.

D

Dead run: running with the wind blowing exactly aft, in line with the *center-line.*
Deviation: the difference between the direction indicated by the compass needle and the magnetic *meridian;* caused by object aboard.
Displacement: 1, the weight of water displaced by a boat is equal to the weight of the boat: 2, a displacement hull is one that displaces its own weight in water and is only supported by buoyancy, as opposed to a planing hull which can exceed its hull, or displacement, speed.
Downhaul: a rope fitted to pull down a sail or *spar.*
Draft: the vertical distance from the *waterline* to the lowest point of the *keel.*
Drag: 1, an anchor drags when it fails to hold; 2, the force of wind on the sails, or water on the hull, which impedes the boat's progress.
Drift: 1, to float with the current or wind; 2, US the speed of a current (rate UK); 3, UK: the distance a boat is carried by a current in a given time.
Drogue: a sea anchor put over the stern of a boat or liferaft to retard *drift.*
Drop keel: a retractable *keel* which can be drawn into the hull, when entering shallow waters and recovering on to a trailer.

E

Eye of the wind: direction from which the *true wind* blows.

F

Fair: a well-faired line or surface is smooth with no bumps, hollows or abrupt changes in direction.
Fairlead: a fitting through which a line is run to alter the direction of the lead of the line.
Fathom: the measurement used for depths of water and lengths of rope. 1 fathom=6ft.=1.83m.
Fid: a tapered tool used for *splicing* heavy rope and for sail-making, often hollow.
Fiddle: a raised border for a cabin table, chart table etc., to prevent objects falling off when the boat *heels.*
Fix: the position of the vessel as plotted from two or more *position lines.*
Forestay: the foremost *stay,* running from the masthead to the stemhead, to which the headsail is hanked.
Freeboard: vertical distance between the *waterline* and the top of the deck.

G

Genoa: a large headsail, in various sizes, which overlaps the mainsail and is hoisted in light to fresh winds on all *points of sailing.*
Gimbals: two concentric rings, pivoted at right angles which keep objects horizontal despite the boat's motion, e.g. compass and cooker.
Go about: to turn the boat through the *eye of the wind* to change *tack.*
Gooseneck: the fitting attaching the boom to the mast, allowing it to move in all directions.

GLOSSARY OF SAILING TERMS

Goosewing: to boom-out the headsail to *windward* on a *run* by using a *whisker pole* to hold the sail on the opposite side to the mainsail.
Ground tackle: general term used for anchoring gear.
Guard rail: a metal rail fitted around the boat to prevent the crew falling overboard.
Gudgeon: a rudder fitting. It is the eye into which the *pintle* fits.
Guy: a steadying rope for a *spar;* a spinnaker guy controls the fore-and-aft position of the spinnaker pole; the foreguy holds the spinnaker pole forward and down.
Gybe: to change from one *tack* to another by turning the stern through the wind.

H

Halyard: rope used to hoist and lower sails.
Hank: fitting used to attach the *luff* of a sail to a *stay.*
Hatch: an opening in the deck giving access to the interior.
Hawse pipe: see Navel pipe.
Head-to-wind: when the bows are pointing right into the wind.
Headfoil: a streamlined surround to a *forestay,* with a groove into which a headsail *luff* slides.
Heads: the toilet.
Headway: the forward movement of a boat through the water.
Heave-to: to *back* the jib and lash the tiller to *leeward;* used in heavy weather to encourage the boat to lie quietly and to reduce *headway.*
Heaving line: a light line suitable for throwing ashore.
Heel: to lean over to one side.

I

Isobars: lines on a weather map joining places of equal atmospheric pressure.

J

Jackstay: a line running fore-and-aft, on both sides of the boat, to which safety harnesses are clipped.
Jury: a temporary device to replace lost or damaged gear.

K

Kedge: a small, light second anchor.
Keel: the main backbone of the boat to which a *ballast keel* is bolted or through which the *center-board* passes.
Ketch: a two-masted sailing vessel with a *mizzen* mast slightly smaller than the main and stepped forward of the rudder stock/post.
Kicking strap: a line used to pull the boom down, to keep it horizontal, particularly on a *reach* or *run.*

L

Lanyard: a short line attached to one object, such as a knife, with which it is secured to another.
Leech: 1, the after edge of a triangular sail; 2, both side edges of a square sail.
Leehelm: the tendency of a boat to *bear away* from the wind
Lee shore: a shore on to which the wind is blowing.
Leeward: away from the wind; the direction to which the wind blows.
Leeway: the sideways movement of a boat off its *course* as a result of the wind blowing on one side of the sails.
Let fly: to let a *sheet* go instantly, spilling the wind from the sails.
Lifeline: a wire or rope rigged around the deck to prevent the crew falling overboard.
Limber holes: gaps left at the lower end of frames above the *keel* to allow water to drain to the lowest point of the *bilges.*
List: a boat's more or less permanent lean to one side, owing to the improper distribution of weight, e.g., *ballast* or water.
Log: 1, an instrument for measuring a boat's speed and distance travelled through the water; 2, to record in a book the details of a voyage, usually distances covered and weather.
Luff: the forward edge of a sail. To luff up is to turn the boat's head right into the wind.
Luff groove: a groove in a wooden or metal spar into which the *luff* of the headsail is fed.
Lurch: the sudden rolling of a boat.

M

Marlin spike: a pointed steel or wooden spike used to open up the strands of rope or wire then splicing.
Mast Step: the socket in which the base of the mast is located.

GLOSSARY OF SAILING

Measured mile: a distance of one nautical mile measured between buoys or *transits/ranges* ashore, and marked on the chart.
Member: a part of the skeleton of the hull, such as a *stringer* laminated into a fiberglass hull to strengthen it.
Meridian: an imaginary line encircling the Earth which passes through the poles and cuts at right angles through the Equator. All lines of longitude are meridians.
Mizzen: 1, the shorter, after-mast on a *ketch* or *yawl*, 2, the fore-and-aft sail set on this mast.

N

Navel pipe: a metal pipe in the foredeck through which the anchor chain passes to the locker below.
Noon sight: a vessel's latitude can be found, using a sextant, when a heavenly body on the observer's *meridian* is at its greatest altitude. The sight of the sun at noon is the one most frequently taken.

O

Off the wind: with the *sheets* slacked off, not *close-hauled*.
On the wind: *close hauled*.
Outhaul: a rope used to pull out the foot of a sail.
Overall length (LOA): the boat's extreme length, measured from the foremost part of the bow to the aftermost part of the stern, excluding bowsprit, self-steering gear etc.

P

Painter: the bow line by which a dinghy, or *tender*, is towed or made fast.
Pay out: to let a rope out gradually.
Pintle: a rudder fitting with a long pin which slips into the *gudgeon* to form a hinged pivot for the rudder.
Pitch: 1, the up and down motion of the bows of a boat plunging over the waves, 2, the angle of the propeller blades.
Point of sailing: the different angles from the wind on which a boat may sail; the boat's *course* relative to the direction of the wind.
Port: the left-hand side of a boat, looking forward (opp. of *starboard*).
Port tack: a boat is on a port tack when the wind strikes the port side first and the mainsail is out to *starboard*. A boat on the port tack gives way to a boat on a *starboard tack*.
Position line/line of position: a line drawn on a chart, as a result of taking a *bearing*, along which the boat's position must lie. Two position lines give a *fix*.
Pulpit: a metal *guard rail* fitted at the bows of a boat to provide safety for the crew.
Pushpit: a metal *guard rail* fitted at the stern.

Q

Quarter: the portion of the boat mid-way between the stern and the *beam*; on the quarter means about 45 degrees *abaft* the beam.

R

Rake: the fore-and-aft deviation from the perpendicular of a mast or other feature of a boat.
Range: 1, see **Transit**; 2, of tides, the difference between the high- and low-water levels of a *tide*; 3, the distance at which a light can be seen.
Rating: a method of measuring certain dimensions of a yacht to enable it to take part in handicap races.
Reach: to sail with the wind approximately on the *beam*; all sailing points between running and *close-hauled*.
Reef: to reduce the sail area by folding or rolling surplus material on the boom or *forestay*.
Reefing pennant: strong line with which the *luff* or leech *cringle* is pulled down to the *boom* when reefing.
Rhumb line: a line cutting all *meridians* at the same angle; the *course* followed by a boat sailing in a fixed direction.
Riding light or **anchor light:** an all-round white light, usually hoisted on the *forestay*, to show that a boat under 50 ft (15 m) is at anchor. It must be visible for 2 mls (3km).
Riding sail: a small sail hoisted to enable a boat to maintain *steerage way* during a storm.
Rigging screw: a deck fitting with which the tension of *standing rigging*, e.g. *stays*, *shrouds*, is adjusted.
Roach: the curved part of the *leech* of a sail which extends beyond the direct line from head to *clew*.
Run: to sail with the wind *aft* and with the *sheets* eased well out.
Running rigging: all the moving lines, such as *sheets* and *halyards*, used in the *setting* and *trimming* of sails.

GLOSSARY OF SAILING TERMS

S

Sailmaker's palm: a strong leather protective loop which fits across the palm of the hand. It has a hole for the thumb and metal reinforced plate on the palm to accept the eye of a needle, and is worn when mending sails or *splicing* ropes.
Schooner: a boat with two or more masts, with the mainmast aftermost.
Scope: the length of rope or cable paid out when mooring or anchoring.
Scuppers: holes in the *toe rail* which allow water to drain off the deck.
Seacock: a valve which shuts off an underwater inlet or outlet passing through the hull.
Sea room: room in which a boat can manoeuvre, clear of land or dangers.
Seize: to bind two ropes together, or a rope to a *spar*, with a light line.
Serve: to cover and protect a *splice* or part of a rope with twine bound tightly against the lay.
Serving mallet: tool with a grooved head, used when serving a rope to keep the twine at a constant and high tension.
Set: 1, to hoist a sail; 2, the way in which the sails fit; 3, the direction of tidal current or stream.
Shackle: a metal link with a removable bolt across the open end; of various shapes: D, U.
Sheave: a grooved wheel in a *block* or *spar* for a rope to run on.
Sheet: the rope attached to the *clew* of a sail or to the boom, enabling it to be controlled or *trimmed*.
Shrouds: ropes or wires, usually in pairs, led from the mast to *chain plates* at deck level to prevent the mast falling sideways; part of the *standing rigging*.
Sloop: a single-masted sailing boat with a mainsail and one headsail.
Spar: a general term for any wood or metal pole, e.g., mast or boom, used to carry or give shape to sails.
Spindrift: spray blown along the surface of the sea.
Spinnaker: a large, light, balloon-shaped sail set when *reaching* or *running*.
Splice: to join ropes or wires by unlaying the strands and interweaving them.
Split pin: see **Cotter pin.**
Spreaders: horizontal struts attached to the mast, which extend to the *shrouds* and help to support the mast.
Stall: a sail stalls when the airflow over it breaks up, causing the boat to lose way.
Stanchion: upright metal post bolted to the deck to support *guard rails* or *lifelines*.
Standing part: the part of a line not used when making a knot; the part of a rope which is made fast, or around which the knot is tied.
Standing rigging: the *shrouds* and *stays* which are permanently set up and support the masts.
Starboard: right-hand side of a boat looking forward (opp. of *port*).
Starboard tack: a boat is on the starboard tack when the wind strikes the starboard side first and the boom is out to *port*.
Stay: wire or rope which supports the mast in a fore-and-aft direction; part of the *standing rigging*.
Steerage way: a boat has steerage way when it has sufficient speed to allow it to be steered, or to answer the helm.
Stem: the timber at the bow, from the *keel* upwards, to which the planking is attached.
Sternway: the backward, stern-first movement of a boat.
Stringer: a fore-and-aft *member*, fitted to strengthen the frames.

T

Tack: 1, the lower forward corner of a sail; 2, to turn the boat through the wind so that it blows on the opposite side of the sails.
Tacking: working to windward by sailing *close-hauled* on alternate *courses* so that the wind is first on one side of the boat, then on the other.
Tack pennant: a length or wire with an eye in each end, used to raise the *tack* of a headsail some distance off the deck.
Tackle: a purchase system comprising rope and *blocks* which is used to gain mechanical advantage.
Tang: a strong metal fitting by which *standing rigging* is attached to the mast or other spar.
Tender or dinghy: a small boat used to ferry stores and people to a yacht.
Terminal fitting: fitting at the end of a wire rope by which a *shroud* or *stay* can be attached to the mast, a *tang* or a *rigging screw/turnbuckle*.
Tide: the vertical rise and fall of the oceans, caused principally by the gravitational attraction of the moon.

GLOSSARY OF SAILING TERMS

Toe rail: a low strip of metal or moulding running around the edge of the deck.
Topping lift: a line from the masthead to a *spar*, normally the boom, which is used to raise it.
Topsides: the part of a boat's hull which is above the *waterline*.
Track: 1, the *course* a boat has made good; 2, a fitting on the mast or boom into which the slides on a sail fit; 3, a fitting along which a *traveller* runs; used to alter the tension of the *sheets*.
Transit: two fixed objects are in transit when seen in line; two transits give position *fix*.
Traveller: 1, a ring or hoop which can be hauled along a *spar;* 2, a fitting which slides in a *track* and is used to alter the angle of the *sheets*.
Trim: 1, to adjust the angle of the sails, by means of *sheets*, so that they work most efficiently; 2, to adjust the boat's load, and thus the fore-and-aft angle at which it floats.
True wind: the direction and speed of the wind felt when stationary, at anchor or on land.
Turnbuckle see **Rigging screw.**

U

Under way: a boat is under way when it is not made fast to the shore, at anchor or aground.
Uphaul: a .....e used to raise something vertically, e.g., the spinnaker pole.

V

Veer: 1, the wind veers when it shifts in a clockwise direction; 2, to pay out anchor cable or rope in a gradual, controlled way.

W

Wake: the disturbed water left *astern* of a boat.
Waterline: the line along the hull at which a boat floats
Waterline length (WL): the length of a boat from *stem* to stern at the *waterline*. It governs the maximum speed of a *displacement hull* and affects a boat's *rating*.
Weather helm: (opp. of *lee helm*).
Weather side: the side of a boat on which the wind is blowing.
Wetted surface: the area of the hull under water.
Whisker pole: a light pole used to hold out the *clew* of a headsail when *running*.
Winch: a mechanical device, consisting usually of a metal drum turned by a handle, around which a line is wound to give the crew more purchasing power when hauling taut a line, e.g., a jib *sheet*.
Windage: those parts of a boat which increase *drag*, e.g., rigging, *spars*, crew, etc.
Windlass: a *winch* with a horizontal shaft and a vertical handle, used to haul up the anchor chain.
Windward: the direction from which the wind blows; towards the wind (opp. of *leeward*).

Y

Yawl: a two-masted boat with the *mizzen* stepped *aft* of the rudder stock/post.

PRE-DEPARTURE CHECK-LIST

- ☐ Check bilge for excess water.
- ☐ **Check weather conditions and tides.**
- ☐ Check food supply.
- ☐ Foul weather gear.
- ☐ Linen, sleeping bags.
- ☐ Fuel.
- ☐ Water.
- ☐ Sunscreens and sunglasses.
- ☐ Tools.
- ☐ Docking and anchor gear.
- ☐ Check radio operations.
- ☐ Navigation charts and instruments.
- ☐ **Float plans to a friend or Coast Guard.** *(See next page.)*
- ☐ Fuel for stove.
- ☐ Cooking and eating utensils.
- ☐ Check battery water level.
- ☐ Oil level, tight V-belts.
- ☐ Check for loose electrical connections in engine room.
- ☐ Secure tools or any loose equipment in engine room so as not to get fouled in engine.
- ☐ AC systems off; electrical cord stowed.
- ☐ Doors and drawers secured.
- ☐ Check steering lock to lock.
- ☐ Check mast for rigging irregularities and tightness.
- ☐ Halyards and sheets are clear and ready to run.
- ☐ No lines or other obstructions near the propeller or bow.
- ☐ Anchor ready to run.
- ☐ Check lifelines for tightness.
- ☐ Turn on fuel and water lines.
- ☐ Stow all loose gear.
- ☐ Open engine cooling water intake thru-hull valve.

FLOAT PLAN

1. Name of person reporting and telephone number:

2. Description of boat:

NAME | TYPE

MAKE | LENGTH | REGISTRATION #

HULL COLOR | STRIPE COLOR | DECK COLOR

OTHER DISTINGUISHING MARKS

3. Persons aboard: NUMBER

NAME | AGE | PHONE #

ADDRESS

NAME | AGE | PHONE#

ADDRESS

NAME | AGE | PHONE #

ADDRESS

4. Engine: TYPE | H.P. | FUEL CAPACITY

5. Safety equipment: ☐ PFDs ☐ Flares ☐ Mirror ☐ Flashlight

☐ Food ☐ Water ☐ EPIRB ☐ Raft/Dinghy

6. Radio: TYPE | FREQUENCIES

7. Trip expectations:

DEPARTING AT (APPROX. TIME) | ON (DATE) | FROM (LOCATION)

GOING TO (LOCATION) | RETURNING (DATE) | IN NO EVENT LATER THAN (TIME & DATE)

8. Automobile: LICENSE # | STATE

MAKE | COLOR | PARKED AT

9. If not returned by _____, call the Coast Guard or:

at: _____

CLOSING UP YOUR BOAT AFTER SAILING

When leaving your Hunter, Legend or Vision at the dock for more than a short time, it is a good idea to review the following check list to make sure everything is in order. This will help protect the various parts of your boat and add considerably to their attractiveness and usable life.

- [ ] Fold and bag headsails and stow below.
- [ ] Furl mainsail and cover, or remove and also bag.
- [ ] Remove and stow all portable deck hardware such as snatch blocks, winch handles, etc.
- [ ] Secure the boom to the topping lift and set it firmly amidships with the mainsheet purchase. (It is also a good idea to rig a line from the steering wheel or tiller to a convenient cleat to keep the rudder from swinging back and forth with the motion of the water.)
- [ ] Attach the shackle ends of all halyards to convenient fittings and take up slack.
- [ ] Cleat and coil halyard tails and permanent sheets, hanging them off the deck to promote drying.
- [ ] Coil and stow all other lines.
- [ ] Cover the winches and steering pedestal when leaving the boat for sev eral days or more.
- [ ] Close all fuel lines and gate valves.
- [ ] Turn off the electrical system.
- [ ] Pump the bilge.
- [ ] Check air vents, secure ports and hatches, and swab the deck, particularly if you have operated on saltwater.
- [ ] Make a final check of mooring lines, chafing gear, fenders, etc.

FOR SAFE BOATING

BE PREPARED

Take a safe boating course from the Coast Guard. You can call 800-336-BOAT for information on courses in your area.

Carry all safety equipment required by federal and state law. Federal requirements are discussed in "Federal Requirements for Recreational Boats" which can be acquired from U.S. Coast Guard Office of Boating, Public, and Consumer Affairs, Washington, D.C. 20593. State requirements will come from your local State Boating Administration. The Coast Guard also recommends a first-aid kit, a pump or bailer, a transistor or weather radio, extra fuel, a paddle, anchor and line, and extra drinking water; also, if not a requirement, flares.

Get a Coast Guard Auxiliary Courtesy Examination. This is a free, confidential safety inspection. Call your local Coast Guard Auxiliary for details.

Be familiar with the use of distress signals and PFDs.

AVOID FIRES

Handle fuels carefully.

Read labels on any stove fuels.

Read the engine owner's manual for proper fuel-system maintenance and inspect your engine's fuel system periodically.

Heed fire extinguisher regulations and keep them in good condition.

While refueling:
a. Fill the portable tanks on the dock.
b. Tie the boat securely.
c. Extinguish cigarettes and all flames on the boat. Turn off all engines and electrical equipment.
d. Keep the hose nozzle in contact with the fuel can or fill.
e. Wipe up all fuel spillage.
f. Ventilate the engine and fuel compartment.
g. Check boat for fumes.

BEFORE GETTING UNDERWAY

Leave a float plan. (See example under Float Plan)
Perform pre-departure check list. (See Pre-departure Check List)
Check the weather: do not venture out if the weather is threatening.

WHILE UNDERWAY

PFDs should be worn by children and non-swimmers **at all times.** ***Everyone should wear them if conditions become hazardous.***

Do not operate a boat if intoxicated, fatigued or stressed. These human factors cause 50 percent of all boating accidents.

Keep a good lookout. This is expecially true of sailboats. Keep a watch to leeward under the headsail. Keep away from swimmers, divers and skiers.

Obey state and federal laws. Know your local laws and "rules of the road."

Respect bad weather: try to get to shore if the weather turns bad. Get and carry a radio with a NOAA "weather band" on FM 162.40-162.55MHZ.

IF TROUBLE OCCURS

Radio for help. Use the emergency VHF, channel (i.e., 156.8MHZ).

Put on PFDs immediately.

Stay with the boat. In cold water, huddle together to prevent hypothermia.

FLOAT PLAN

Make copies of the Float Plan page and use before each trip. Fill it out and leave it with a reliable person who will notify the Coast Guard or other rescue organizations if you fail to return on time. **Do not forget to cancel the float plan upon your return.**

GENERAL HANDLING & OPERATION

Diesel Engine

An engine owner's manual is supplied with your boat and should be read thoroughly. The manual contains technical specifications, running instructions and maintenance schedule on lubricants and fluids. For long engine life, follow routine maintenance schedules.

You should check engine oil, transmission fluid and coolant levels. Water, rust, scale and dirt will cause serious damage to the injectors on diesel engines. You should check your filters frequently and change when necessary.

If you start your engine, run it a minimum of 15 minutes to bring it up to operating temperature. This insures that any condensation is evaporated. Your engine should "run-out" at 3/4 throttle at least once a month to clean out carbon build-up and moisture.

Starting:

1. Visually check engine compartment to see that the throttle linkage, shifting controls, electrical connections and fuel lines are properly secured.
2. *Before each start* check oil in engine and transmission..
3. Insure that engine shut-off cable is properly secured and operating.
4. Place the shift lever in the neutral position.
5. Move the throttle or "fuel" lever forward to approximately the half-speed position.
6. Insert the starter key and turn to the "on" position.
7. Press the starter button and hold until engine starts, then release. The buzzer and/or light should then go off.
8. Back the throttle off to an idle position (700 to 800 rpm); allow cold engine to warm up a minimum of five minutes.
9. Check that the lube oil pressure warning light and the charge lamp go off. If any of the warning lamps do not go off above 1,000 rpm, the engine is malfunctioning and should be stopped immediately. Consult your nearest engine dealer.

   NOTE: To stop engine at any time, pull "engine stop" lever all the way out. Before stop ping, however, it is a good idea to idle the engine in neutral for about five minutes, then race it in the full-throttle position for a moment, then return to idle and stop engine.

   CAUTION: Do not turn safety main switch to "off" while engine is running. This can seriously damage the alternator.

Motoring:

If your boat is equipped with 110V shore power, remember to unplug it upon departure. When engine is warm, move the shift lever to forward and reverse to insure that it engages properly. To increase RPM's push throttle lever forward and pull back to decrease RPM's.

Motoring Continued:

CAUTION: Your rigging will conduct electricity. **Always check for overhead high tension wires before proceeding.** Once clear, you may increase your speed in a reasonable and safe manner as desired.

IMPORTANT: Do not shift from forward to reverse or back without first lowering engine rpm to idle. When sailing, it is best to start the engine before the sails are lowered. This way, it is still possible to maneuver if the engine should not start.

Electrical System

Your Hunter is fitted with an electrical system designed for both AC (AC not available on the 26.5 and smaller) and DC. While in port, you can operate any tool, appliance or other device designed to function on regular house current (120V) simply by plugging your dockside power cord into a convenient outlet on shore and turning your AC main breaker on.

CAUTION: Do not allow your dockside power cord to come in contact with the water. Never operate any AC power tool or other electrical equipment while you or the device are in contact with the water.

When leaving port, disconnect the dockside power cord and turn the main DC breaker on. This allows you to use the ship's lights and other equipment designed to operate on direct current. Keep in mind that your DC power source is a 12-volt battery and, just as with your automobile, it must be charged regularly by operating the engine. Unless a state of charge is maintained, there may not be enough power to operate the starter motor. Dangerous situations can result if the engine cannot be started when needed.

Make a regular visual check of battery(ies) to insure proper water level and inspect terminals for signs of corrosion. If your boat sits for long periods without use, it is often a good idea to remove the battery(ies) and attach them to a trickle charger to keep them fully charged and ready to use.

Water System

The water heater operates either on 120 volts AC or when the engine is running. To obtain hot water from the engine, it must run a minimum of one-half hour.

CAUTION: Do not turn the water heater on until you are sure the tank is filled with water. To do so will destroy the heating element, which is not covered by the warranty.

Pressure water pumps are the demand type. Once the circuit breaker switch is on, opening the faucet will produce water flow.

NOTE: Intermittent operation of the freshwater pump while all faucets are closed usually indicates a leak somewhere in the lines. Trace the lines to locate the leak and repair.

Please refer to your manual under Heads & Galley systems for more specific information.

GENERAL HANDLING & OPERATION

Toilet:

IMPORTANT: When not in use, lever must be left in the "dry" position to prevent flooding.

Before using, place the lever in the "wet " position and pump slowly to partly fill and wet the inside of the bowl. Return to "dry" position.

After using, return the lever to the "wet" position for flushing and pump until the bowl is thoroughly cleaned. Continue with several more full strokes to flush discharge lines. Return lever to the "dry" position and pump slowly until bowl is empty.

Note: Always close seacocks when sailing or when boat is not in use.

Pumps:

All pumps should be checked frequently to insure proper operation. *This is an especially important regular maintenance item since functioning of a pump could save your vessel from serious damage at some future time.*

Inspect all hoses for chafing and dry rot. See that hose clamps are tight. Check that the pump impeller area is clean and free of obstructions. Inspect electrical wiring for corrosion. Make sure float switch moves freely and is making an electrical connection.

Docking:

Docking your boat should be handled carefully to avoid potential damage. Under normal wind and water conditions, the following considerations should be made:

1. Whenever possible, your approach should be made against the prevailing wind and current to assist in stopping the boat. Where these conditions are contrary, the strongest should be used to determine approach.

2. Approaching the dock-dock lines and fenders should be at ready, loose gear stowed and decks cleared. Determine the direction of wind and current, and, once you decide which side of the boat will be against the dock, rig dock lines and fenders on the appropriate side. One dock line should be attached to the bow cleat, another to the stern cleat opposite the side that will lie against the dock. *NOTE:* If the boat is to lie against a piling, rig a fender board across two or more fenders

3. Tying up-attach bow and stern lines to dock, hauling boat in with fenders against dock. Rig crossing spring lines to limit motion forward and aft. Be sure to allow some slack in all lines to compensate for tidal activity if present. Never use bow rail, stern rail or stanchions to secure vessel, even for brief periods. For other types of moorings, or for abnormal wind or water conditions, consult your *Chapmans's* or other approved boating guide.

Anchoring:

Your Hunter comes with an on-deck anchor well and a burying-type anchor as standard equipment. The anchor is selected to suit the size and weight of your boat under normal anchoring conditions, and provides its best holding characteristic in muddy or sandy bottoms.

When anchoring, pay particular attention to the scope of your anchor rode (i.e., the relationship between the depth of the water and the length of the rode). A good rule of thumb is to allow a scope of about 7:1 (a rode seven times as long as the vertical distance from the bow to the bottom). A helpful aid is to mark the rode every 20 feet or so with knots or other types of indicators. Before dropping anchor, make sure the bitter end is secured to the cleat in the anchor well.

Also, be sure to consider wind direction, currents, mean low tide depths and other local conditions when anchoring, as well as the positions of any boats already anchored nearby.

CAUTION: Anchoring in unusual water and/or weather conditions will require additional precautions, Consult your *Chapman's* or other approved guide for suggestions.

To weigh anchor, motor or sail (under main only) slowly forward. When at a point directly above the anchor, a quick tug should free it from the bottom. Take care not to damage the topsides when hauling the anchor aboard. It is good practice to thoroughly clean the anchor prior to placing it in the anchor well.

DUTCHMAN®

Martinus Van Breems, Inc.
160 Water Street Norwalk CT 06854 USA
tel 203 838 0375 fax 203 838 0377

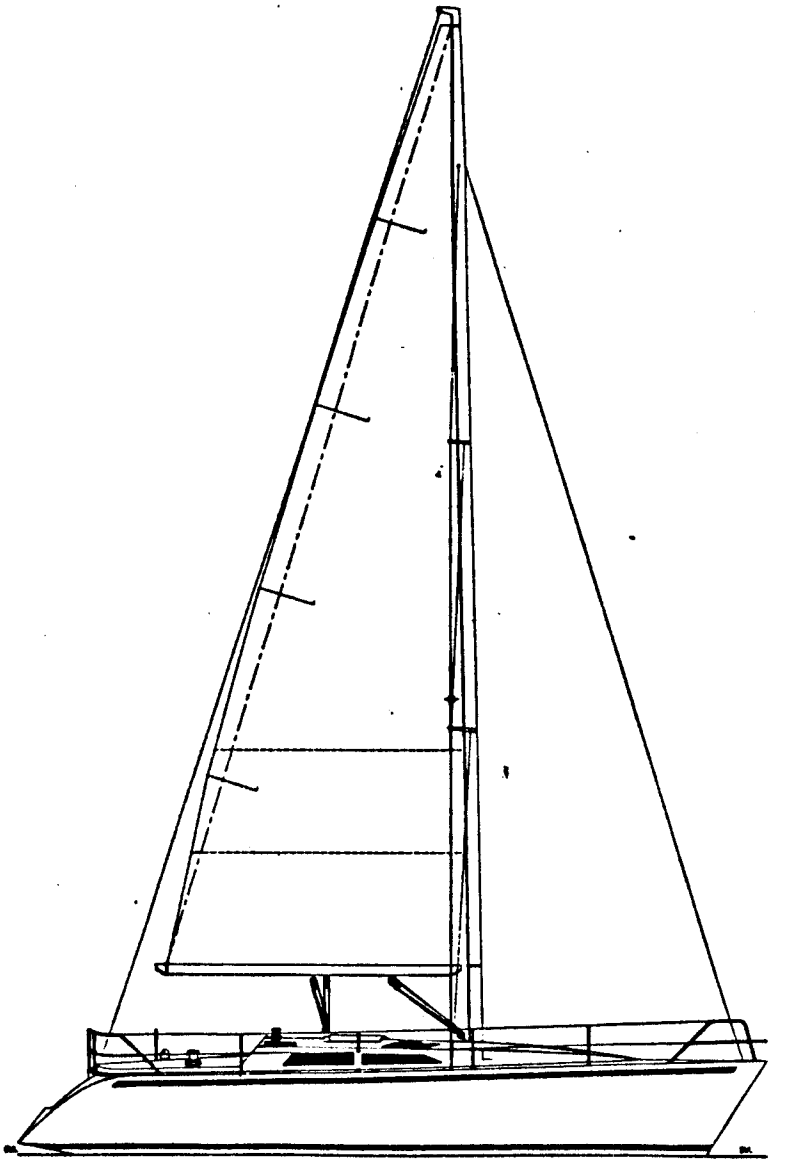

Dutchman System A for Hunter Marine

Legend 35.5

D. Thread the Control Lines

1. With the sail raised, count the number of fairleads in the vertical rows. The rows should be all odd or all even. Drop the sail.

2. If an **even** number of fairleads, insert the control lines in the uppermost fairleads on the **same** side of the sail as the tabs sewn into the foot are on. If an **odd** number, begin weaving the control lines through the uppermost fairleads on the **opposite** side of the sail as the tabs are on.

3. Weave the control lines through all of the fairleads in each vertical row. The end of the control lines should exit through the lowest fairlead on the same side of the sail as the tab. You may find it easier to use two people, one on either side of the sail to pass the control line back and forth.

4. Open the zipper in the tab and pull the control line through the hole at the top of the tab. Install the discs with the nuts facing the sail. Tighten down till control line is secured.

E. Adjust the Control Line Length

The control lines should be slack enough that sail shape is not affected by the tension on the control lines with the sail raised. To adjust the control line length, the sail must be fully raised with the main sheet tight and topping lift snug. Then adjust the control lines so they have about 1" (25mm) of slack with the tab standing up. This can be done while out sailing.

F. Using the Dutchman

When dropping the sail the first few times, be careful that the folds drop to the correct sides of the boom. First, straighten the folds at the luff, then walk back and tug aft on the leech. After a few weeks the sail will develop a memory of the folds and little straightening will be needed.

Tighten the topping lift, if possible, before dropping the sail. This will tension the control lines. You can make the control lines slacker while sailing by slacking off on the topping lift.

For More Information:

See the Owner's Manual. Please contact us if you have any questions.
Tel 203 838 0375 Fax 203 838 0377

DUTCHMAN®

Martinus Van Breems, Inc.
160 Water Street Norwalk CT 06854 USA
tel 203 838 0375 fax 203 838 0377

RIGGING the DUTCHMAN System A

December 1993

This sail is equipped with the Dutchman System A. The system consists of nylon monofilament control lines that weave through fairleads in the sail, and run down to tabs sewn into the base of the sail. Nylon discs on both sides of the tab secure the control line to the tab. The top of the control lines attach to a vinyl coated wire pennant. This pennant is hoisted up by a halyard style topping lift.

Contact us if you didn't receive a **Dutchman A Owner's Manual.**

A. Parts Check

Make sure the following components are included with the sail:
- 2 sets of glass filled nylon discs to attach the control lines to the tabs in the foot of the sail.
- 1 Topping lift pennant, which is vinyl coated wire, made up with the following parts:
  - Nylon Monofilament control lines attached with our black, glass filled swivel clamps.
  - A shackle attached to the bottom of the pennant.

B. Rig the Topping Lift Pennant

Rig the topping lift pennant after the mast is stepped.

1. Remove the pennant from the bag, and carefully uncoil it. Attach the bottom to the end of the boom with the supplied shackle. Then uncoil the control lines.

2. Attach the top end to the halyard style topping lift and hoist it up.

C. Adjust the Topping Lift Clamps

1. Hoist the main, tension the sheet and topping lift. Walk about 2 boat lengths away, and check that the black clamps are **above** the uppermost grommet, and reasonably in line.

2. Adjust the distance between the clamps if needed. This is done by dropping down the topping lift pennant to the clamp, loosening and moving the donut clamp, and retightening

DUTCHMAN®

Martinus Van Breems, Inc.
571 Riverside Avenue Westport, CT 06880
Tel. 203-454-0222 FAX 203-454-1445

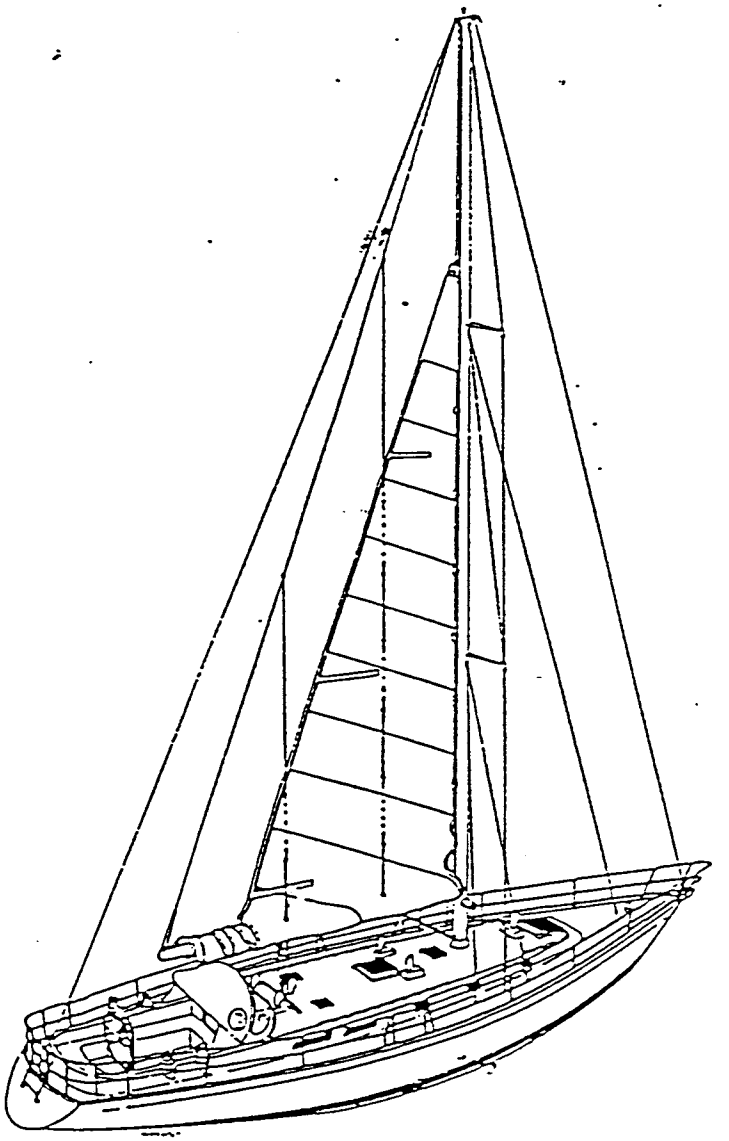

Dutchman- Sail Flaking System with a Type A Topping Lift

OWNERS MANUAL

Contents

	Page
Introduction	1
Components and Specifications	1
Definitions	2
Tools Required	2
General Drawing showing Point X	2
Attach the Control Lines to the Topping Lift	3
Running the Control Lines	4
Threading the Control Lines through the sail	4
Fastening the Control Lines to the Tabs	4
Adjustments -	5
Adjusting the Control Line Length -	5
Using the Dutchman -	6
Lowering the Sail -	6
Running Downwind -	6
Reefing -	6
Removing the sail -	7
Adjusting the topping lift -	7
Maintenance -	7
Distributor list -	8
Warranty card -	8

Dutchman™ is a trademark of Martinus Van Breems, Inc. The Owners Manual is Copyright 1990 by Martinus Van Breems, Inc., 571 Riverside Avenue, P.O. Box 2875 Saug. Sta., Westport, Connecticut, 06880, U.S.A., tel 203-454-0222 fax 203 454 1445 .

The Dutchman is protected by US Patent 4,688,506, Australian Patent 580,691, Canadian Patent 1,273,848, German Patent 0232413. Other International Patents Pending.

Martinus Van Breems, Inc., reserves the right to change prices, hardware, and specifications without notice at any time.

The Dutchman™ system is unconditionally guaranteed against defects in materials supplied by Martinus Van Breems, Inc., for a period of five (5) years. Defective items may be returned to Martinus Van Breems, Inc., and will be replaced or repaired at the option of Martinus Van Breems, Inc. Return of defective products should be accompanied by a letter giving name, address, phone number, date of purchase, place of purchase, and identification of installing company, as well as an explanation of the defect or malfunction, and the conditions under which the product was being used. This warranty does not apply to or include any product that was improperly installed, or subjected to misuse, negligence, accident, or subjected to unauthorized modification or repair. Normal wear of line or rope on all equipment is excluded.

This warranty is in lieu of all other implied, express, and statutory warranties and guarantees, and in no even shall Martinus Van Breems, Inc., be liable for special, incidental or consequential damages.

Introduction

Thank you for your purchase of a Dutchman System. Your system is supplied with a Type A Topping Lift. This means the control lines are fastened to a topping lift pennant, instead of to the Continuous Topping Lift supplied with Type B and C Dutchman Systems. We only recommend the A System for boats with halyard style topping lifts, although it can be used on boats with a boom adjusted topping lift.

With a halyard style topping lift, you only have to hoist up the topping lift pennant and run the lines through the sail to install the system. Removing the sail is also much easier with a halyard style topping lift.

Components

Check that you have the following components. Discs (for tabs) may have already been fastened to the tabs. Normally, the sailmaker will have made up a new topping lift pennant, using the (topping lift) clamps and fasteners. The swiveling mono clamps can be used with up to 3/8" or 10mm wire or rope. The lower donut clamps will need to be drilled if used with over 1/8" (4mm) wire or 1/4" (6mm) rope. Use the supplied spacers for rope or vinyl coated wire.

Item	Description	Quantity per Control Line
Discs	Attach the control lines to the tabs (double qty for A60)	2 halves
" " Fasteners	1/2" 8/32 SS machine screws with locking nuts	2 of each
Clamps	Used to attach the control lines to the topping lift	2 halves
" " Fasteners	3/4" machine screws with locking nuts for donut clamp	4 of each
	1/2" machine screws with locking nuts for mono clamp	2 of each
" " Spacer	Use to drill out clamp for rope or vinyl coated wire	2 total
Shackle	Use to attach topping lift pennant to the end of the boom	1 total

Length and size of the control line is based on the system type and boat size. The first number of the system refers to the maximum luff length, while the second number refers to how many control lines the system has. For example, a 30-2 System is for luffs up to 30', with 2 control lines. When ordering replacement mono, refer to your system number.

Control line Nylon Monofilament, UV Stabilized. Pound test and length as follows:

System -	30-2	40-2	40-3	50-2	50-3	60-3	60-4
Lb test/ Ft	300/50'	400/60'	400/80'	500/80'	500/110'	500/140'	500/180'

DISC

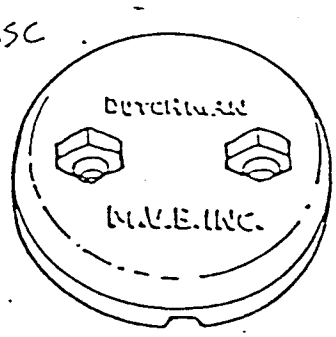

CLAMP

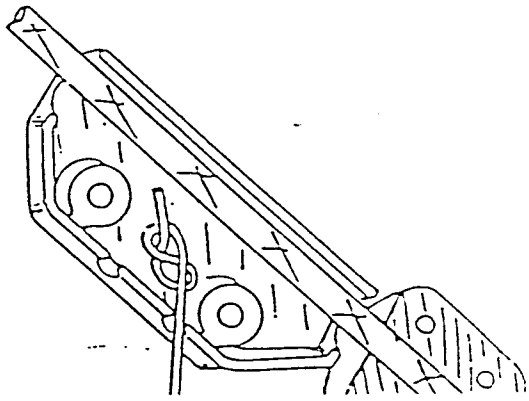

Definitions

Boom Topping Lift -	A topping lift which is fixed at the top of the mast. There is usually an adjusting line attached to the boom.
Halyard Style Topping Lift -	Topping lift is run over a sheave at the top of the mast.
Point X -	The point on the Topping Lift where the control line is attached.
Pennant -	Usually vinyl coated wire, the Topping Lift Pennant is what the control lines are attached to. With a halyard style topping lift, one end is attached to the end of the boom, and the other end is hoisted up by the topping lift line. With a boom adjusted topping lift, one end is fastened to the top of the mast, and the other end is normally attached to an adjusting line or block and tackle at the end of the boom.

Tools Required

#2 Phillips screwdriver
Pliers

If a boom topping lift
Vinyl tape
Bosun's chair

If topping lift clamps not yet attached
Round file or correct sized bit and drill

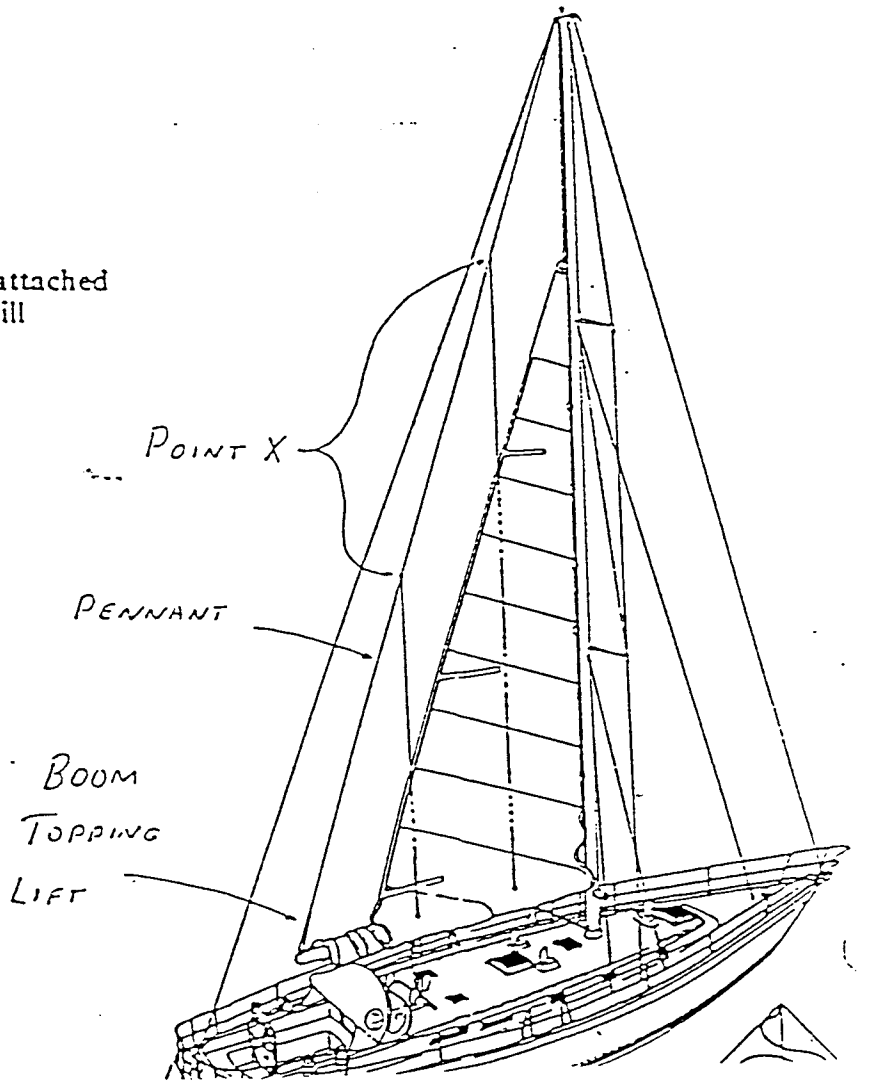

Attaching the Control Lines to the Topping Lift

The mainsail should be 'bent on' at this point. If the sailmaker has already made up the topping lift pennant, install it by securing the bottom of the pennant to the end of the boom, and hoisting it up with a halyard style topping lift. If a boom adjusted topping lift, you will need to go aloft to switch topping lifts pennants.

If the topping lift pennant has not been made up for some reason, or if the position of the clamps need to be adjusted, use the following instructions.

Boom Topping Lift

1. Rig a bosun's chair and send one person up the mast to the upper Point X. Do not use the main halyard. Detach the topping lift from the end of the boom and bring it to the mast.

Halyard Style Topping Lift

1. Attach the new pennant to topping lift and the end of the boom, and hoist up.

2. Using colored tape, mark the topping lift pennant every 6 inches (15 cm) in the general vicinity where the control lines will be attached. Raise the main as high as you can, then slacken the topping lift. Tension the mainsheet and snug up the topping lift.

3. Have someone sight up each row of fairleads on the sail to determine which mark is above the uppermost fairlead. It helps to be several boat lengths away from the boat to see that the mark is above the uppermost fairlead and as in line as possible. This is Point X. Remove the other tape marks. You MUST NOT be under the uppermost fairlead. It is ok to be forward and/or above Point X.

4. Attach the lower, donut clamp to the topping lift at Point X, using the 3/4" (20mm) screws. This clamp will need to be drilled or filed if used with over 1/8" (4mm) wire or 1/4" (6mm) rope. Use the spacers if you will be attaching them to a larger size rope or vinyl coated wire. Assemble the clamp with the spacers, drill, and then reuse the spacers for the next clamp. The clamp must tightly grip the pennant - do not drill the hole too large. If the pilot hole in the clamp is too large, rotate the clamp 90 degrees.

5. Tie a fig 8 in the end of the mono and place in the mono clamp. Using the 1/2" (13mm) screws, fasten two halves of the mono clamp over the pennant and above the donut.

6. Follow these steps for each control line. Use the other end of the control line for the next Point X, and cut in the middle if a 2 line system. If a 3 line system, leave at least 3 feet (1m) hanging under the boom.

7. Check the position of the clamps with the sail all the way up and the main sheet tightened. To move, loosen the donut clamp, move and retighten.

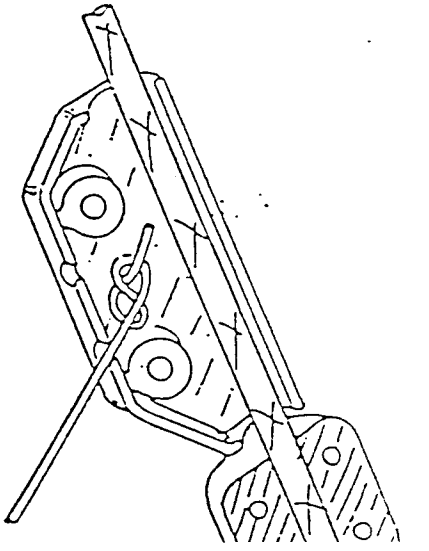

Running the Control Lines

First, loosely attach the discs to the tabs while the sail is still raised. Then drop the sail, thread the control lines through the fairleads in the sail and secure the lines to the tabs. These steps are described in more detail below. If the sailmaker has already run the lines through the sail, skip to the next section.

all
odd - 1 + 5
~~Above~~

Threading the Control Lines

1. Count the number of fairleads in each vertical row. All the rows should be either even or odd in number. If this is not so, contact us. Next, attach the discs to the tabs. The nuts should be facing the sail. Do not tighten down on the screws. Then drop the sail.

2. If there is an odd number of fairleads in the vertical rows, start the control line through the fairlead from the opposite side of the sail as the tab is on. If there is an even number in the vertical rows, start the control line on the same side of the sail as the tab is on.

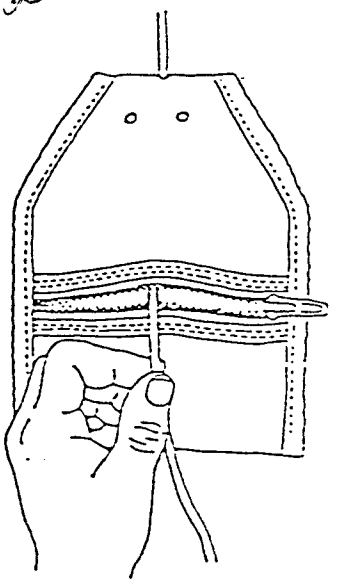

3. Thread the control lines through the sail using 2 people, one on either side of the sail. Be careful not to miss a fairlead - it's easy to do.

Fastening the Control Lines

1. Insert the control line into the attachment tab. Reach into the tab and pull the control line tight.

2. Tighten down the screws.

The installation of the Dutchman™ system is now complete. Refer to the next section, Adjustments, to adjust the system.

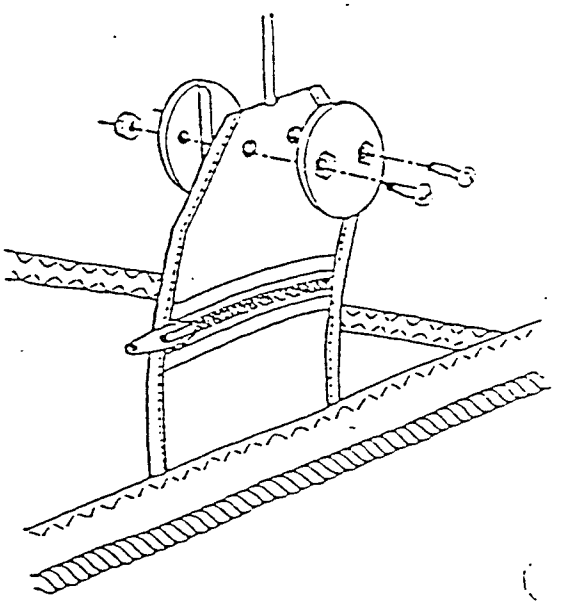

Adjustments

To check the adjustment of the **Dutchman**™ system, the sail must be fully raised with the mainsheet in tight. The topping lift should be snug. This can be done while sailing. The topping lift clamps must be above the uppermost grommet and as in line as possible. It is acceptable if the topping lift clamp is above and forward of the uppermost grommet or fairlead. The clamp can NOT be under the uppermost fairlead. If it is, it must be adjusted.

The control lines should have enough slack to allow one inch (1") of play up or down. The control lines should be adjusted if there is more or less play.

Adjusting the Topping Lift Clamps

1. From several boat lenths away, if possible, sight up the sail to determine how far the clamps should be moved.

2. If a halyard style topping lift, drop down the pennant until you can reach the clamps that need to be moved. If a boom adjusted topping lift, refer to the section on Attaching the Control Lines to the Topping Lift.

3. Loosen the Donut clamp, slide up or down, and retighten. Recheck the position.

Adjusting the Control Line Length

1. Raise the main all the way. Slacken the topping lift, pull the mainsheet in tight, then retension the topping lift. This can be done while out sailing.

2. Loosen the screws. Open the zipper and adjust the control line until there is one inch (1") of slack in the line and/or it is just slack.

3. Tighten down the discs and check the tension again.

4. Tie a knot at the end of the control line to keep it from pulling out of the tab. Coil the mono, push it into the tab, and close the zipper.

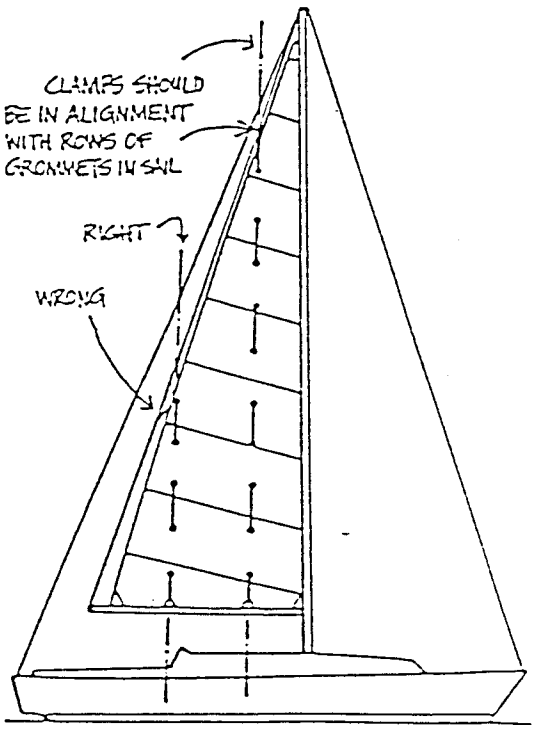

Using the Dutchman™

Lowering the Sail

If a Halyard Style topping lift, the topping lift should be tensioned before dropping the sail. If a boom adjusted topping lift, the topping lift should be tensioned after the sail is dropped. This will make the control lines tighter.

Head to wind, and let the sheet off. The Dutchman™ will not work properly if the sail is not luffing. Lower the mainsail and straighten the luff (or forward edge) of the sail as it comes down. Then tug aft on the leech to straighten it out and adjust the folds so they are neat. The sail will come down more easily and neatly if you are close to the wind.

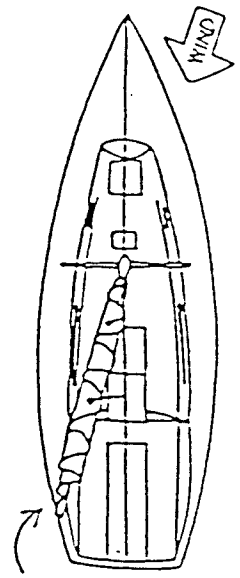

BECAUSE SAIL STAYS ON BOOM, IT CAN BE LOWERED WITH BOOM OUT TO SIDE

Especially with a stiff main, the sail will develop a memory after it's used for one to three months, and become more automatic.

In winds of over 15 knots, you may want to head so the wind is 15 to 25 degrees off the bow. You will then keep the boom clear of the cockpit. You can drop or reef the sail on any point as long as the sail is luffing. Ease the main sheet, and don't pull in the boom until after the sail is down.

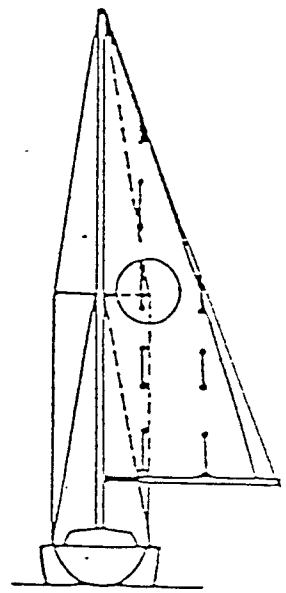

Downwind

There is a very remote possibility that when running downwind, a control line may become snagged on a spreader tip if the spreader tip is not well faired. If this were to happen, the sail could be damaged when it is sheeted in. Therefore, when initially running downwind with the Dutchman™, check how close the control wire is to the spreader tip. Please note that your sailmaker has already set the location of the control wire when building the Dutchman™ into your sail to prevent this from happening. Be sure to avoid uncontrolled jibs and cover or remove anything that might snag a control line.

Jiffy Reefing

Roller reefing will only work with our C system. In most cases, you will not need intermediate reef points with a Dutchman™, as the sail cannot fall off the boom.

We strongly advise using forward reef lines instead of the reef hooks, as they are much easier to use in heavy weather. In most cases, you will only need a pad eye, a cleat, and enough line to run from the pad eye, up to the reef, and back down to the cleat. The pad eye should level with the reef when the sail is dropped, while the cleat can be under the reef. The reef line must hold the sail the correct distance from the mast and above the boom. Check this before installing the pad eye and cleat.

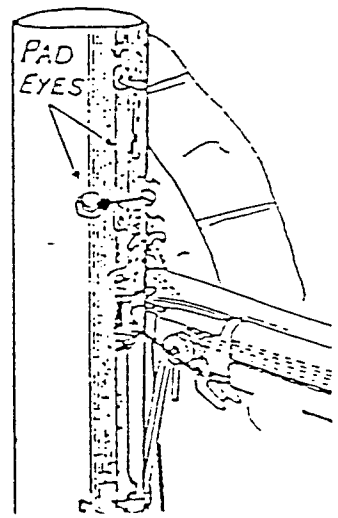

Removing the Sail

The important point when storing the sail is that the sail should be flaked as it lies on the boom. This helps the sail keep its 'memory' when stored. If you have a Halyard Style topping lift and the Dutchman control lines are attached to a separate pennant, simply drop the pennant down and remove with the sail with the pennant. This is the best arrangement. Otherwise, follow the directions below.

Loosen the discs and pull as much of the control line out of the attachment tab as possible (till you reach the knot). If you were able to pull out more than 3 feet (1m), cut the control line 4" (10cm) above the uppermost fairlead and use this 4" to tie on a nut, stick, washer, or something similar which will prevent this cut end of the control line from pulling through the sail. This will make the sail much easier to flake when removing it from the boom.

If you did not have enough control line, we suggest you tape a 3' length of dacron cord with a fig 8 knot at the end to the end of the control line, and pull this dacron cord messenger through the tab and sail. Disconnect the mono and again tie something to the end of the cord to keep it from pulling through the sail.

In the spring, reverse the procedure to pull the control line back through the sail.

You can also pull out the control line and tape it to the topping lift, however, this will cause more work next spring, and will make it more difficult to flake the sail.

Adjusting the Topping Lift

The topping lift must be eased while sailing, to allow the leach of the sail to twist off. When the topping lift is slack, the Dutchman™ lines will not cause chafe or restrict the sail. You may want to give a tug on the control lines after you let off the topping lift.

Maintenance

Since the Dutchman™ has no moving parts, the only maintenance required is periodic checks of the topping lift and control wires.

At least once a season, topping lifts should be checked for chafe or deterioration.

The only item that will need replacing is the monofilament control line. After 2-3 seasons it will begin to show some wear. Replace the control lines as per the size and length given in the specifications section. You can purchase the mono lines from us, one of our distributor or sailmakers, or try a commercial fishing supplier. Only use mono that has UV inhibitors in it (most do).

Distributor List

Australia / New Zealand	Burke, 21 Higginbotham Rd, Gladesville NSW 2066 Australia Tel. (02) 809 4419 Fax (02) 809 7729
Holland	Belship, Merwedeweg 3C, 3621 LP Breukelen, Holland Tel. (0) 3462 65544 Fax (0) 3462 65475
United Kingdom/Ireland	Mike Flint Marketing; 39 Hartswood Rd., Stamford Brook, London W12 9NE, U.K. Tel (81) 749 2111 Fax (81) 740 0058
Germany/Austria/Switz	Robert Lindemann, Wendenstr. 455 2000 Hamburg 26, Germany Tel. (40) 21 11 97 0 Fax (4) 21 11 97 30

For other locations, contact ourselves or the nearest distributor.

Martinus Van Breems, Inc., 571 Riverside Avenue, Westport, CT 06880, USA
Tel: (203) 454 0222 Fax: (203) 454 1445

Fill out and return the attached Licensing/Warranty card.

Thank you, and please contact us if you have any problems, questions or comments.

DUTCHMAN®

Martinus Van Breems, Inc.
571 Riverside Avenue Westport, CT 06880
Tel. 203-454-0222 FAX 203-454-1445

Notes to the Dealer for rigging the Dutchman on the Hunter Legend & Passage Series

May 1989

The new Hunter Legend and Passage series are coming standard with the Dutchman System B. The Dutchman system consists of vertical control lines of Nylon Monofilament that weave through custom nylon 'fairleads' in the sail. The control lines are fastened to Dacron zippered tabs sewn into the base of the sail, sandwiched between nylon discs on both sides of the tab. The attachment and proper adjustment of the control lines is described at length in the Owners Manual.

The System B also includes our Continuous Topping Lift (CTL) System. The position of the clamps can be adjusted from the end of the boom by rotating the CTL Line. Boom height is adjusted normally.

A. Parts Check

Make sure the following 2 components are included in the parts bag:

- 2 white discs per control line to attach the control lines to the tabs sewn in the foot of the sail.
- 1 Assembled Continuous Topping Lift (CTL) System. This is made up with the following parts:
    - The CTL Line, which is 1/4" - 5/16" braided Dacron line.
    - Control lines of 400 - 500 lb test Nylon Monofilament.
    - 1 block, 1 jam cleat, and 1 shackle attached to the CTL Line.
    - Black clamps that attach the control lines to the CTL Line

Illustrations and descriptions of these parts can be found on Pages 3 & 4 of the Owners Manual. The Owners Manual should be with the other Owners Manuals and Ships Papers.

B. Rigging the Continuous Topping Lift System

The CTL System will arrive with the clamps, control lines, block, jam cleat, and shackle attached.

1. If a mast adjusted (halyard type) topping lift, install the CTL after the mast is stepped by attaching the block of the CTL to the Topping Lift adjusting line, and hoisting up the CTL.

2. After the boom is attached to the gooseneck fitting, attach the jam cleat to the topping lift adjusting line with the shackle provided.

(over)

C. Adjusting the CTL Clamps

1. Hoist the main. Pull the main sheet and topping lift adjusting line snug. Sight up the vertical rows of grommets.

2. Flip over the V shaped jam cleat. Slacken the topping lift and rotate the CTL Line from the end of the boom until the uppermost clamp is directly above the forward vertical rows of fairleads, then retension the topping lift. Mark where the CTL passes around the jam cleat with a pen.

3. Adjust the lower clamp(s) if needed. This is done by rotating the CTL to get the clamp to deck level, loosening the 4 screws in the clamp, sliding it up or down, tightening the screws, and repositioning the CTL. Again, it helps to slacken the topping lift when rotating the CTL. See Page 9 of the Owners Manual.

D. Threading the Control Lines

1. With the sail raised, count the number of fairleads in either one of the vertical rows. Drop the sail.
   If an **even** number of fairleads, insert the control lines in the uppermost fairleads on the **same** side of the sail as the tabs sewn into the foot are on.
   If an **odd** number, begin weaving the control lines through the uppermost fairleads on the **opposite** side of the sail as the tabs are on.

2. Weave the control lines through all of the fairleads in each vertical row. The end of the control lines should exit through the lowest fairlead on the same side of the sail as the tab.
   Use two people, one on either side of the sail to pass the control line back and forth.

3. Open the zipper in the tab and pull the control line through the hole at the top of the tab. Install the discs and tighten. The nuts should face the sail. See Page 10 of the Owners Manual. Then hoist the sail to adjust the control line length.

E. Adjusting the Control Line Length

The control lines should be slack enough that sail shape is not affected by the tension on the control lines with the sail raised. To adjust the control line length, the sail must be fully raised with the main sheet and topping lift tensioned. Refer to Page 11 of the Owners Manual.

The control lines should have enough slack to allow 1 inch of play up or down.

F. Final Adjustments

1. Make certain that the topping lift adjusting line is long enough to allow the topping lift to be slackened with the sail raised.

2. Make sure the jam cleat is in the locked position (pointing up). **Using rigging tape, tape the CTL line just above the jam cleat to prevent the CTL Line from rotating.**

G. Using the Dutchman

When dropping the sail the first few times, be careful that the folds drop on the correct sides of the boom. First, straighten the folds at the luff, then walk aft and tug aft on the leech. After a few weeks the sail will develop a memory of the folds and little straightening will be needed.

Slacken the topping lift after the sail is raised. With a Mast Adjusted Topping Lift, retighten the topping lift **before** the sail is dropped.

Please contact us if you have any questions, problems, or if the clamps need adjustment.

L.O.A.----------35'-7"
L.W.L.----------29'-10"
BEAM----------11'-9"
DRAFT----------4'-6"
DISLPACEMENT-13,000 LBS.
BALLAST-------4,800 LB.
SAIL AREA----569 SQ. FT.
@ 100% FORETRIANGLE

E----------14'-3"
J----------12'-2"
P----------44'-1"
I----------42'-0"
MAST HEIGHT----55'-0"
(from DWL)

MAIN SAIL AREA——— 314 SQ FT
FORETRIANGLE AREA — 255 SQ FT
130% JIB ——————— 346 SQ FT
SAIL CLOTH ———— 8 oz. - MAIN
7 oz. - GENOA

HUNTER

H35.5 SAIL PLAN H35A2613

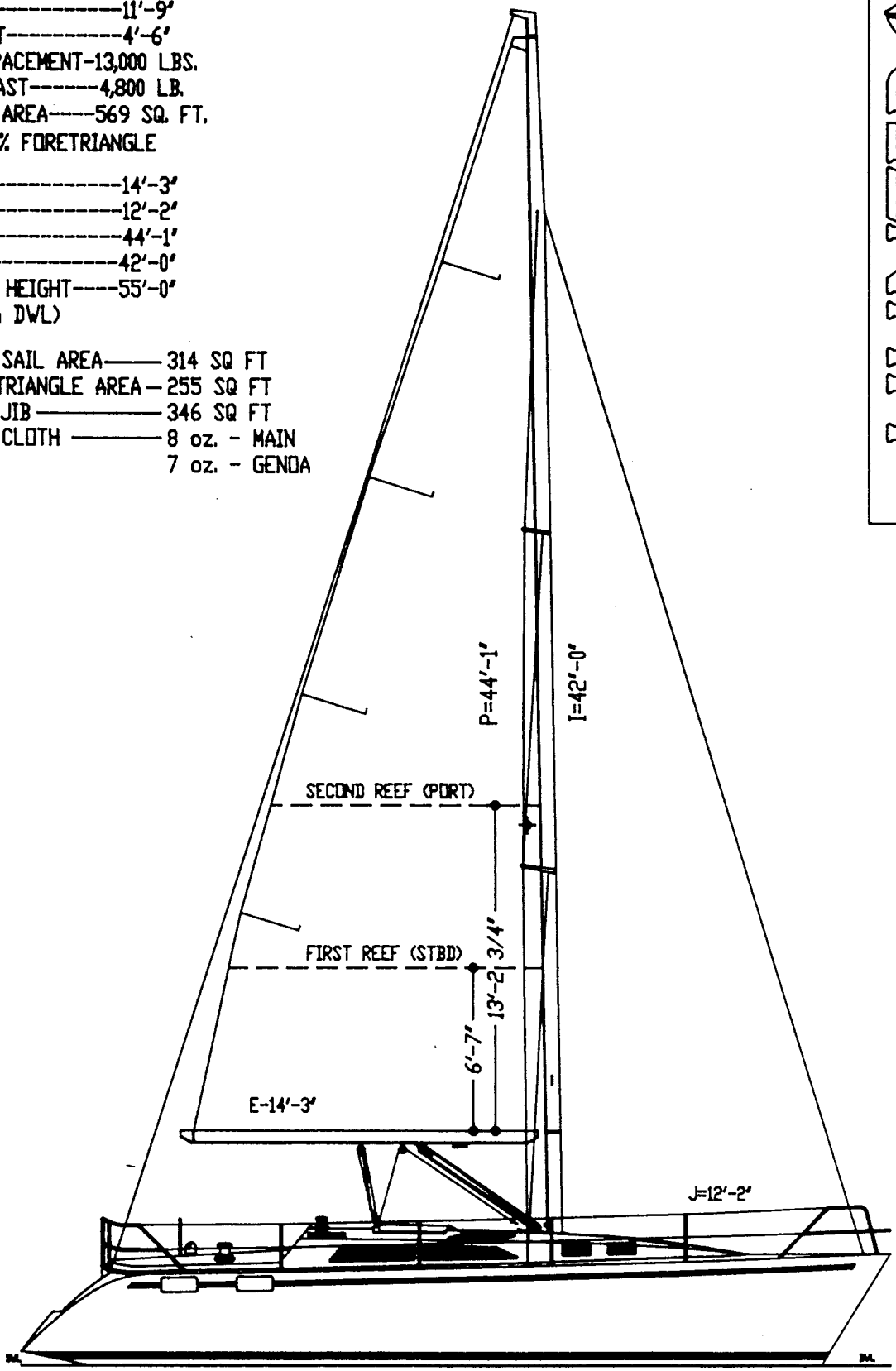

SAILS & RIGGING

Tuning the Conventional Fractional Rig (Hunter 27OB, 27IB, 28, 30, 33.5, 35.5, and Legend 37.5

Tuning the Rigging:

After raising your mast, attach the headstay, backstay, upper shrouds and lower shrouds. Set the headstay turnbuckle at half open and then tighten backstay turnbuckle to medium tension.

To center the mast athwartships, start with only slight tension on the upper and lower shrouds. Check that the mast is centered in the boat by measuring from the masthead to the chainplates with a steel tape measure hoisted completely up the main halyard. Adjust the upper shroud until the measurements port and starboard are exactly the same. Now the spar is plumb athwartships, tension both uppers equally, counting turnbuckle revolutions as you go. Tighten uppers until you have approximately one inch of "prebend" fore and aft in the mast. This is achieved because the swept spreaders will push the middle part of the mast forward as you increase tension of the uppers.

Now tighten the lower shrouds evenly, making sure the mast remains straight athwartship. Sight up the luff groove to assure this straightness. Lowers should end up almost as tight as the uppers. (The uppers should always be the tightest.) The 28, 30, 33.5, 35.5, and Legend 37 are equipped with double spreaders. The three shrouds should be made progressively tighter toward the top of the rig; the uppers should be the tightest of all. Tighten backstay to a taut position: perhaps eight to ten turns past your original tension.

Check the mast tuning by sailing in medium winds (10-12 knots). Sometimes fine tuning the upper and lower shrouds is necessary when the spar is loaded in sailing conditions. Sail on both tacks, sighting up the luff groove to check athwartship straightness. Both upper and lower shrouds should be taut on the leeward side.

When mast tuning is complete, install cotter pins in all turnbuckles and tape over sharp edges of the cotter pins with chafe tape. (Refer to the drawing on Conventional Fractional Rig).

HUNTER

DOUBLE SPREADER FRACTIONAL RIG W/ SWEPT BACK SPREADERS

GFN2601A

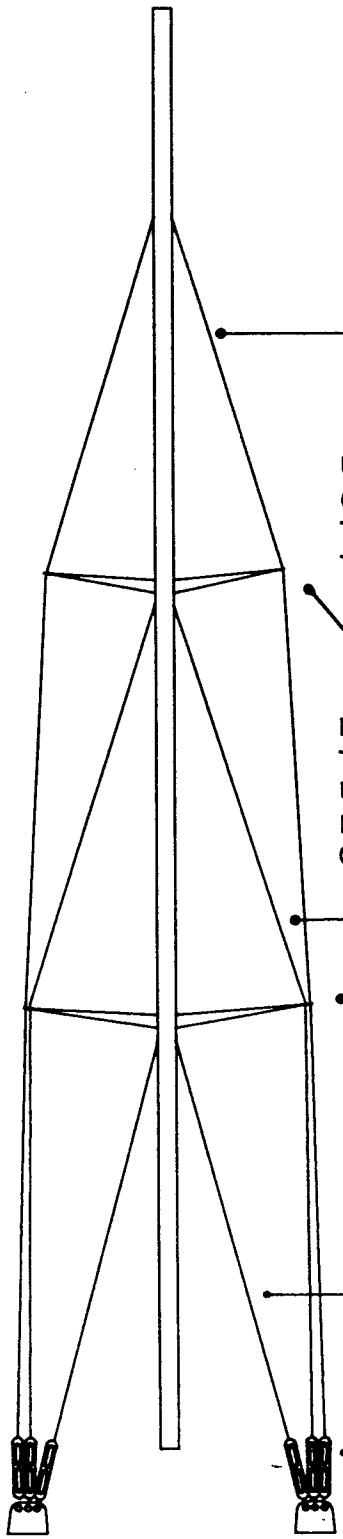

UPPER: RUNS FROM TANG OR T-BALL BY FORESTAY THROUGH BOTH SPREADER TIPS TO CHAINPLATE ON DECK.

INTERMEDIATE: RUNS FROM TANG OR T-BALL BELOW UPPER SPREADER THROUGH LOWER SPREADER TO CHAINPLATE ON DECK.

LOWER: RUNS FROM TANG OR T-BALL BELOW SPREADER TO CHAINPLATE ON DECK.

BACKSTAY: RUNS FROM MASTHEAD TO BACKSTAY-CHAINPLATE ON DECK.

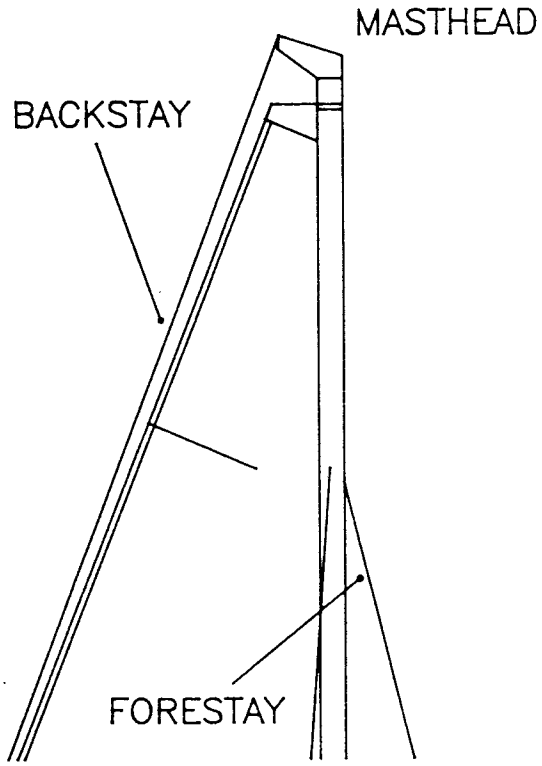

FORESTAY RUNS FROM A POINT APPROXIMATELY 20% BELOW MASTHEAD TO STEMHEAD FITTING.

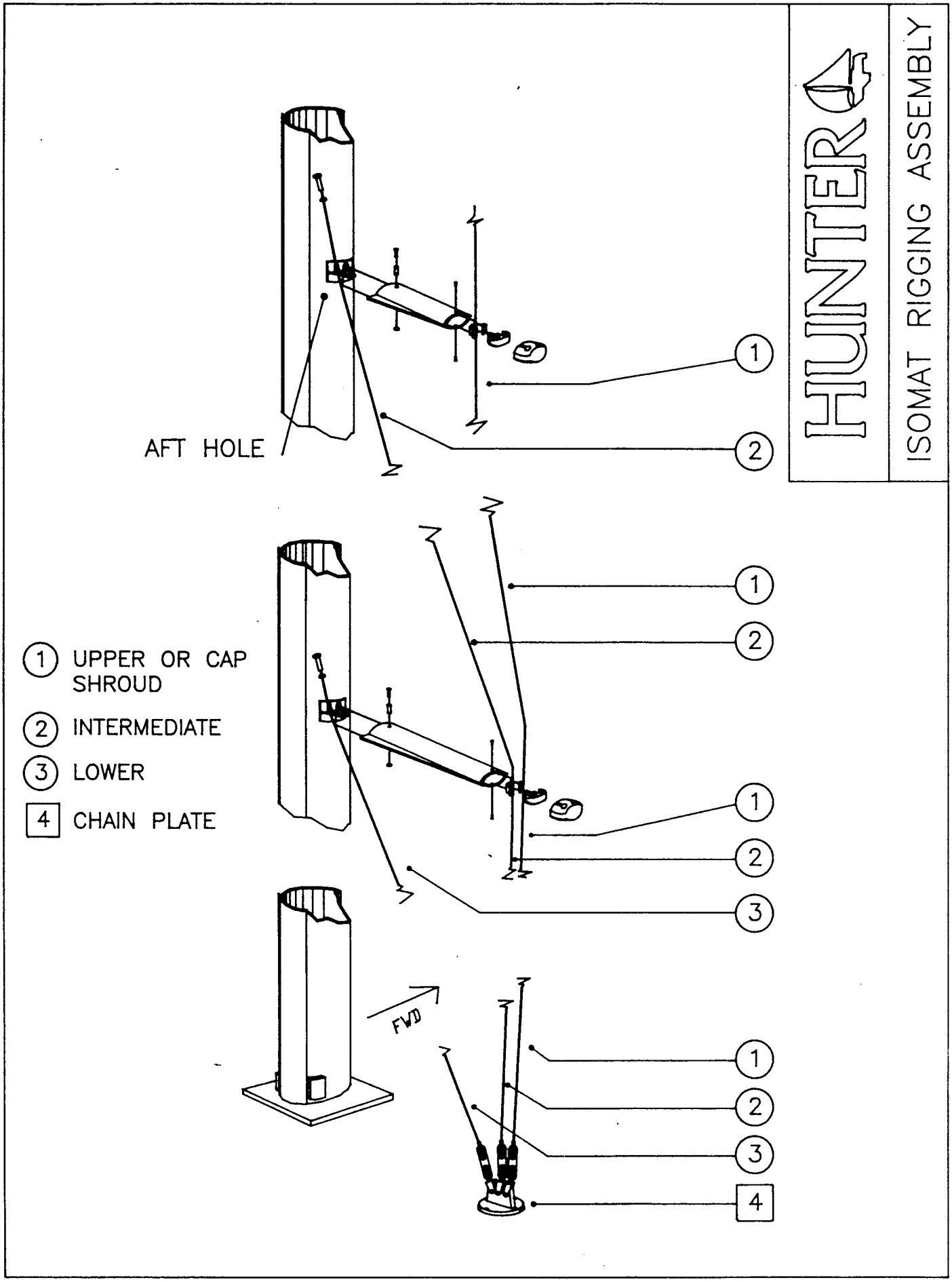
HUNTER
ISOMAT RIGGING ASSEMBLY
GEN2603A
AFT HOLE
1 UPPER OR CAP SHROUD
2 INTERMEDIATE
3 LOWER
4 CHAIN PLATE
FWD
1
2
3
4

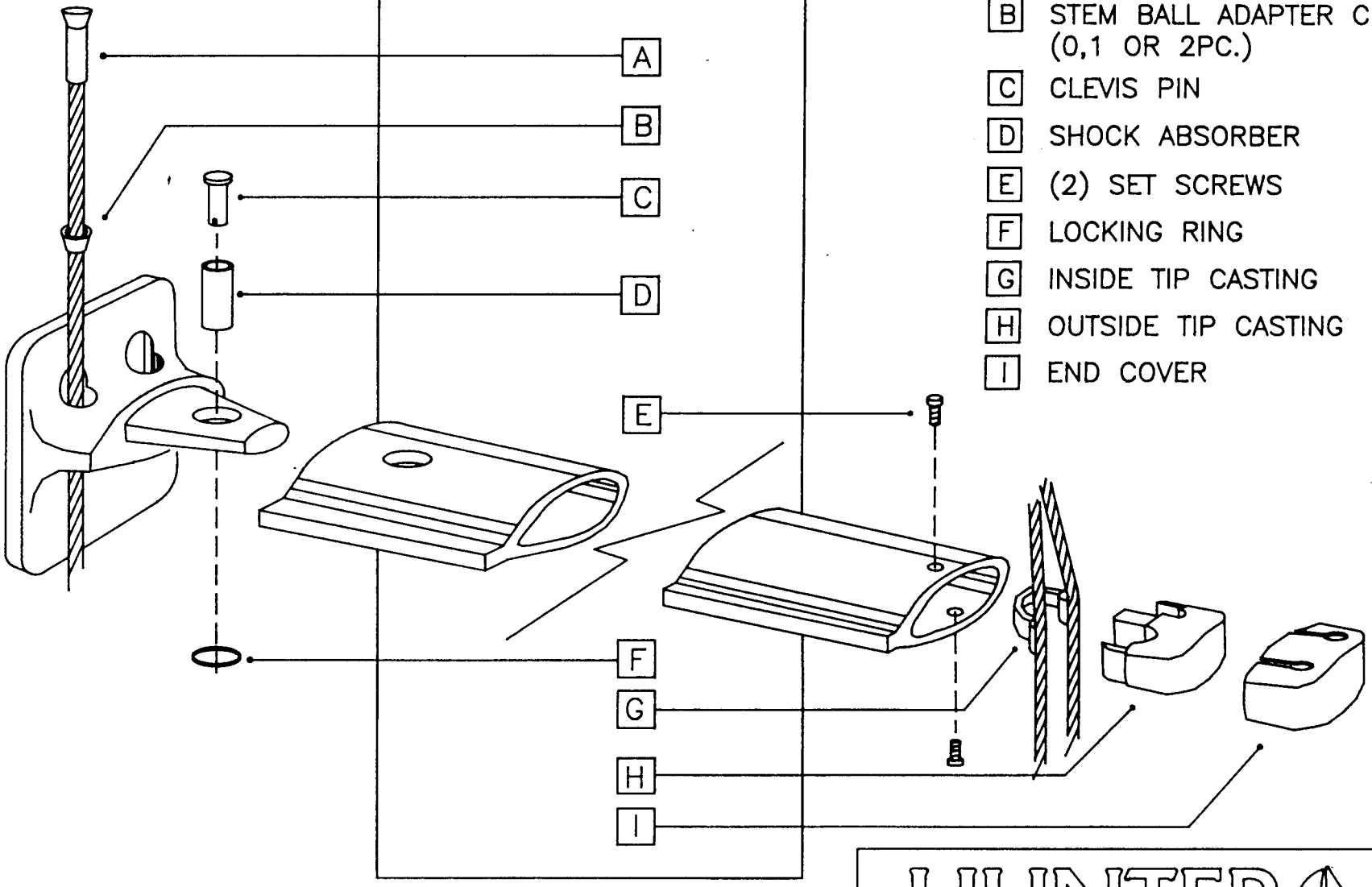

A STEM BALL

B STEM BALL ADAPTER CUP (0,1 OR 2PC.)

C CLEVIS PIN

D SHOCK ABSORBER

E (2) SET SCREWS

F LOCKING RING

G INSIDE TIP CASTING

H OUTSIDE TIP CASTING

I END COVER

HUNTER

ISOMAT SPREADER DETAIL GEN2607A

HUNTER

Mast Step Detail H35.5A2615

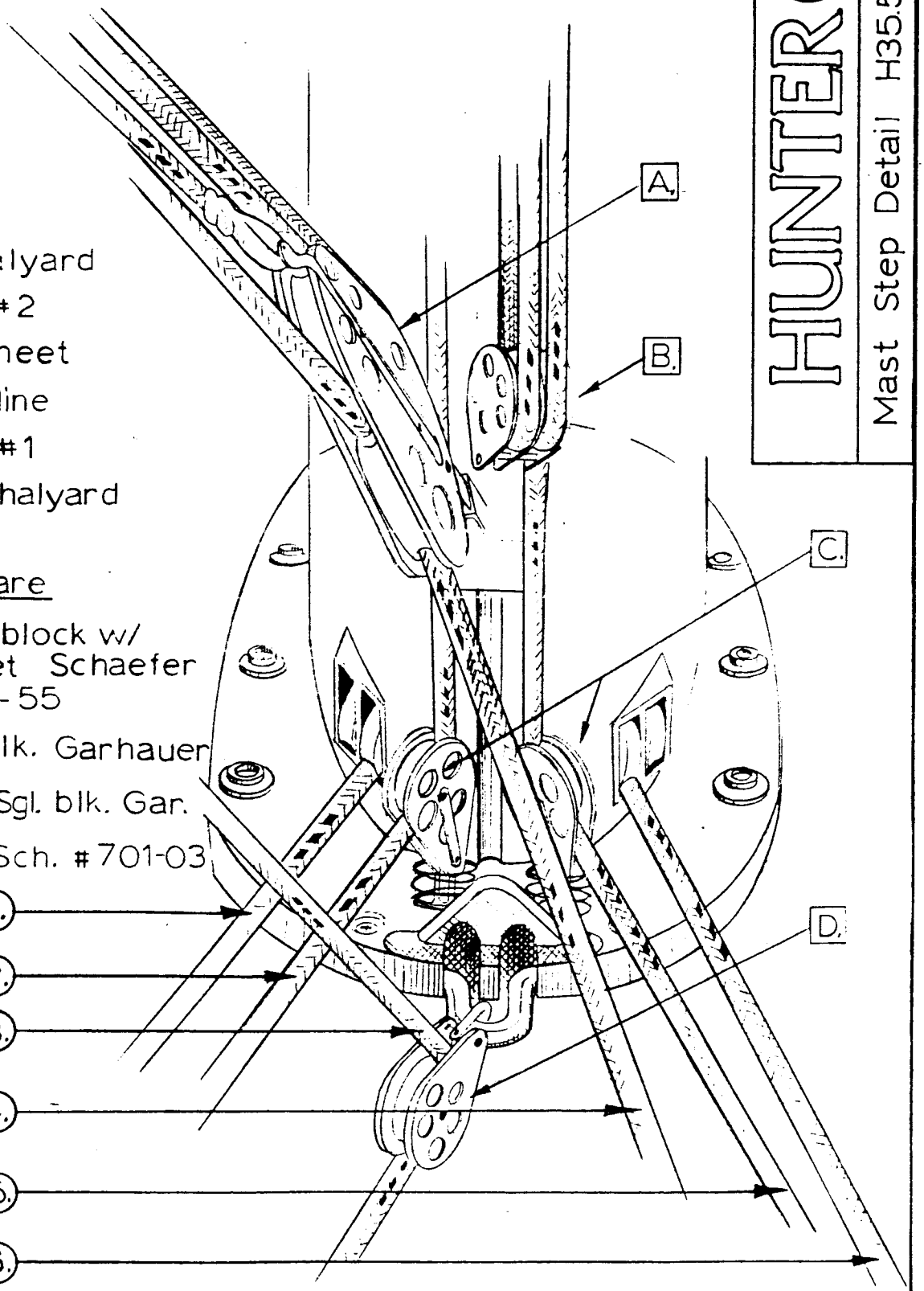

Lines

1. Jib halyard
2. Reef #2
3. Mainsheet
4. Vang line
5. Reef #1
6. Main halyard

Hardware

A. Fiddle block w/ becket Schaefer #701-55
B. Dbl. blk. Garhauer
C. (2) Sgl. blk. Gar.
D. Sgl. Sch. #701-03

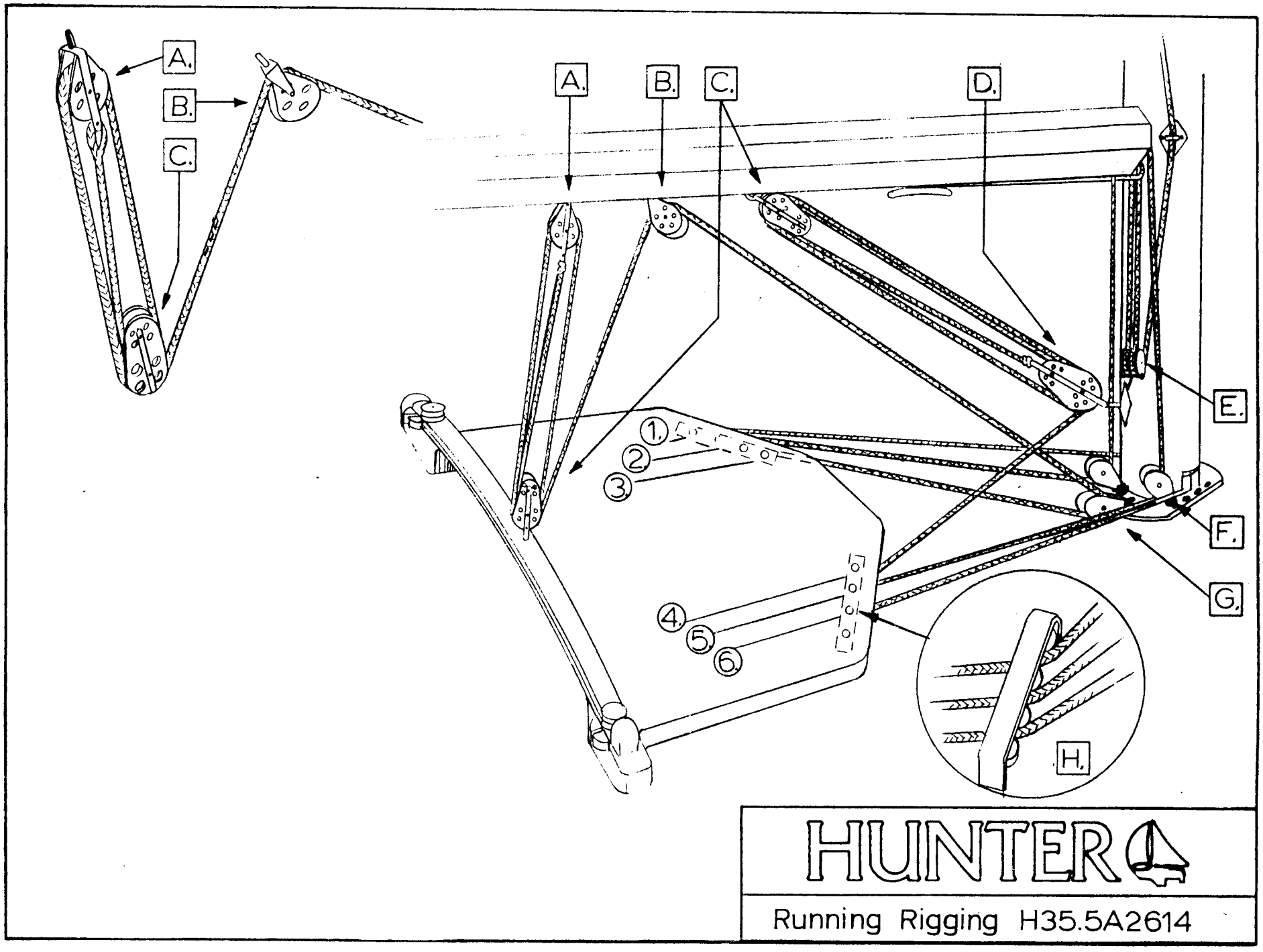

HUNTER

Running Rigging H35.5A2614

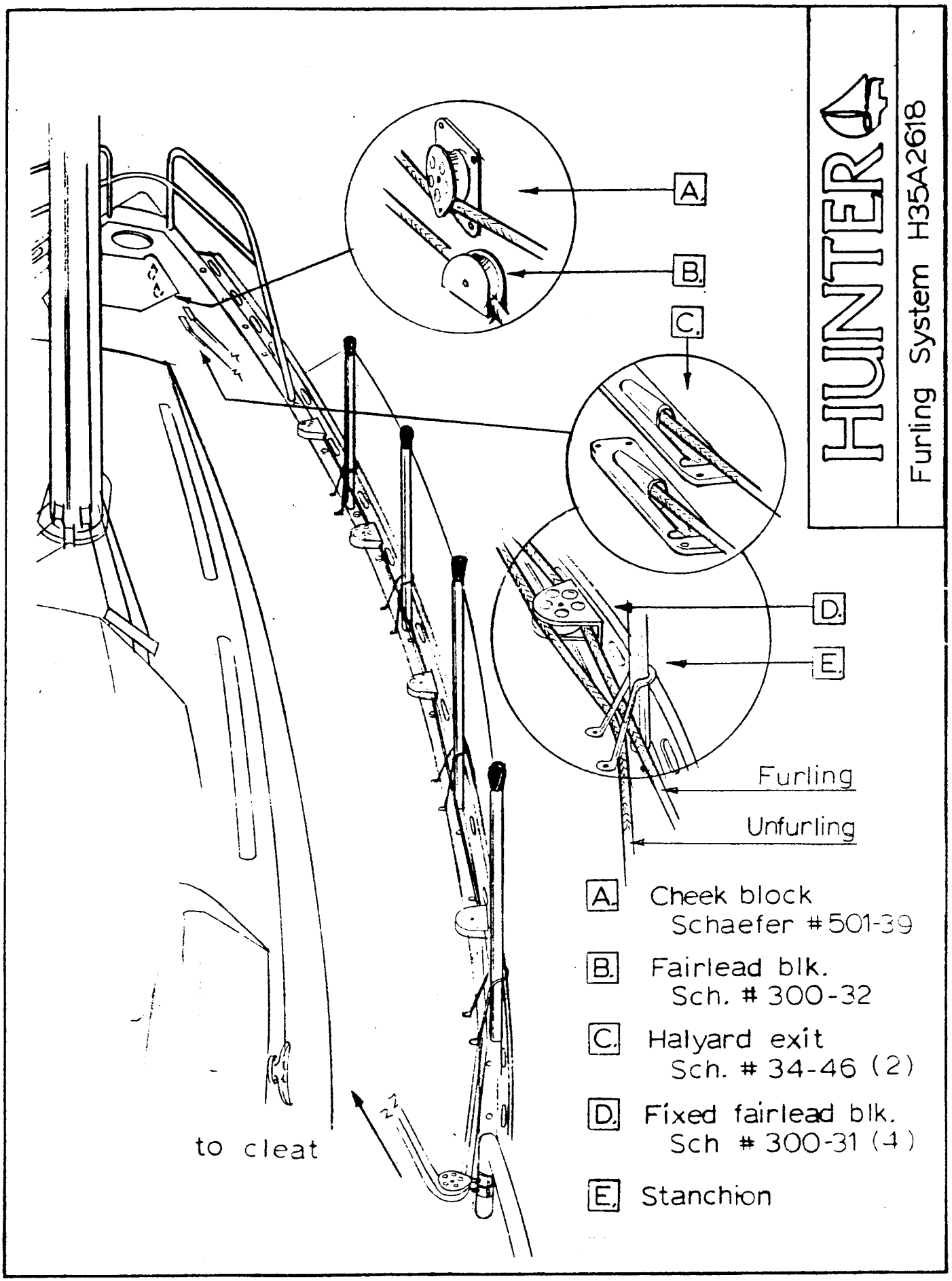
HUNTER
Furling System H35A2618
A.
B.
C.
D.
E.
Furling
Unfurling
to cleat
A. Cheek block
Schaefer #501-39
B. Fairlead blk.
Sch. # 300-32
C. Halyard exit
Sch. # 34-46 (2)
D. Fixed fairlead blk.
Sch # 300-31 (4)
E. Stanchion

HUNTER

Furling

H35.5A2617

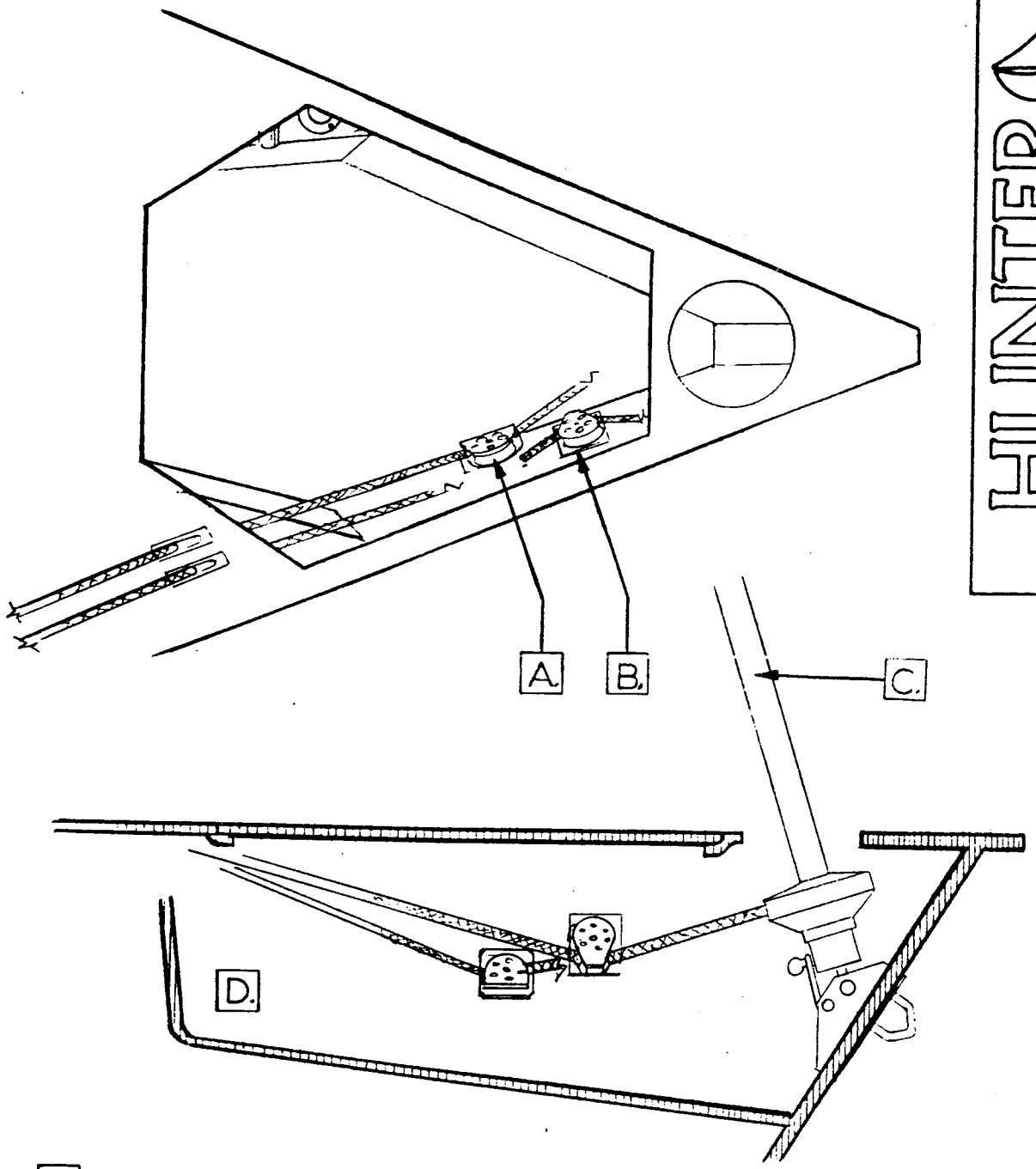

A. Fairlead block Schaefer #300-32

B. Cheek blk. Sch. #501-39

C. Furling

D. Anchor well

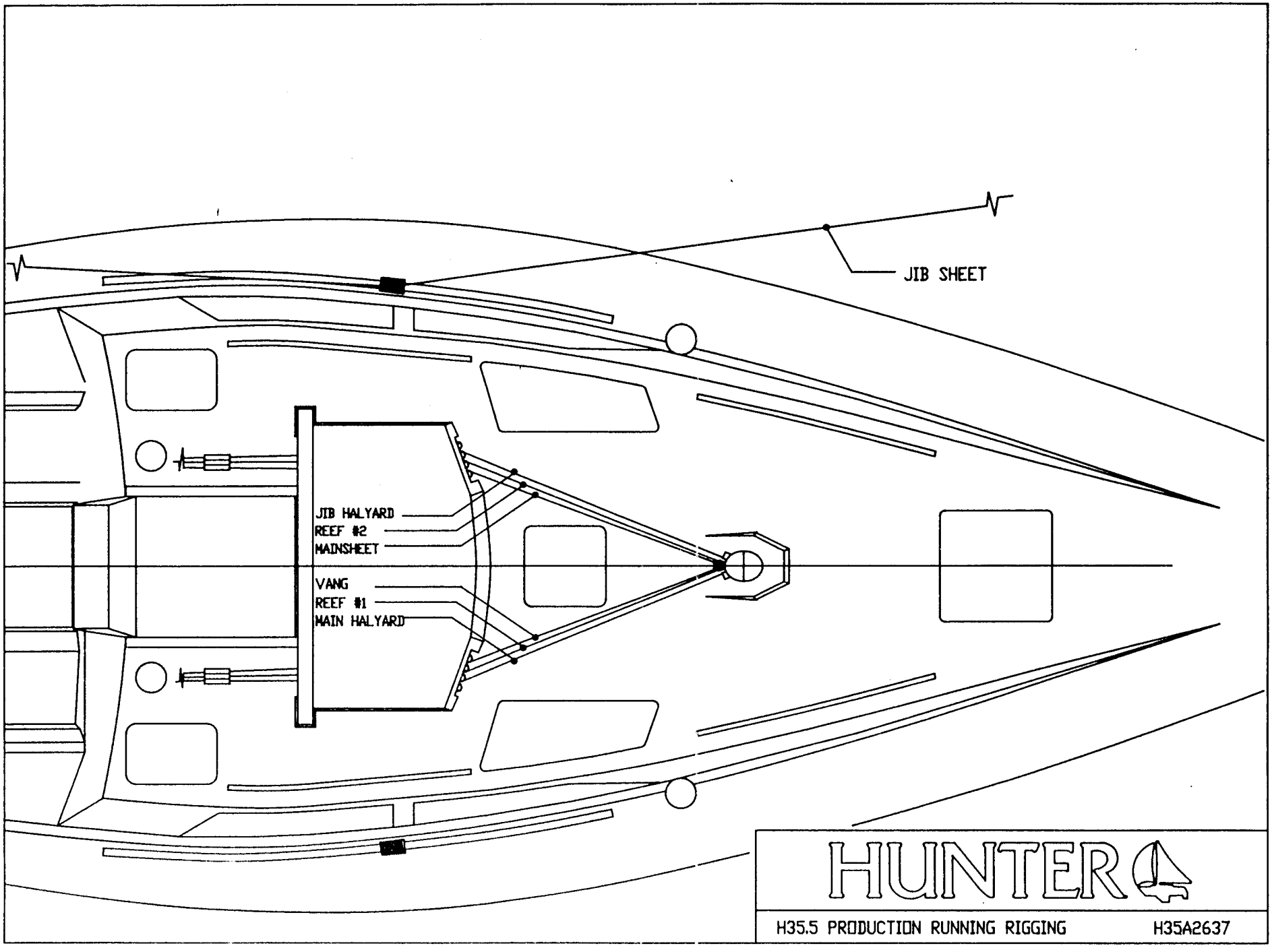
JIB SHEET
JIB HALYARD
REEF #2
MAINSHEET
VANG
REEF #1
MAIN HALYARD
HUNTER
H35.5 PRODUCTION RUNNING RIGGING
H35A2637

① REEF #1
② REEF #2 (RUNS THE SAME AS REEF #1)

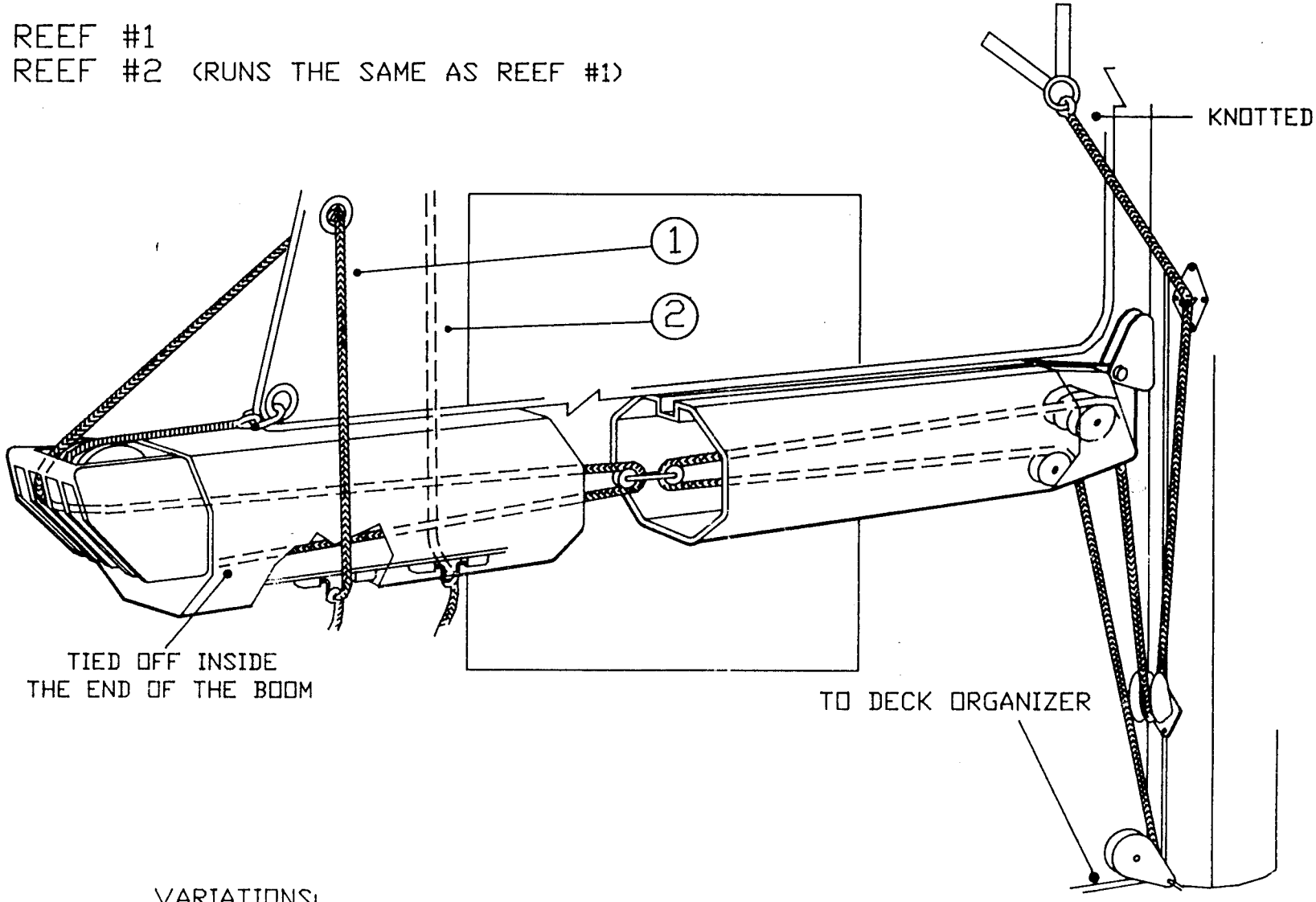

VARIATIONS:

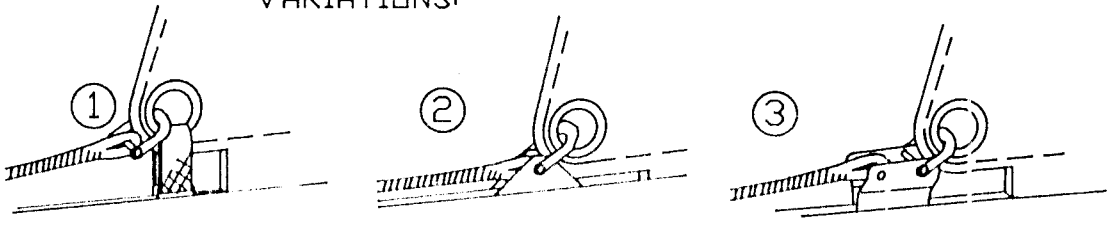

HUNTER

BOOM AND REEF LAYOUT
ISOREEF GEN2609A

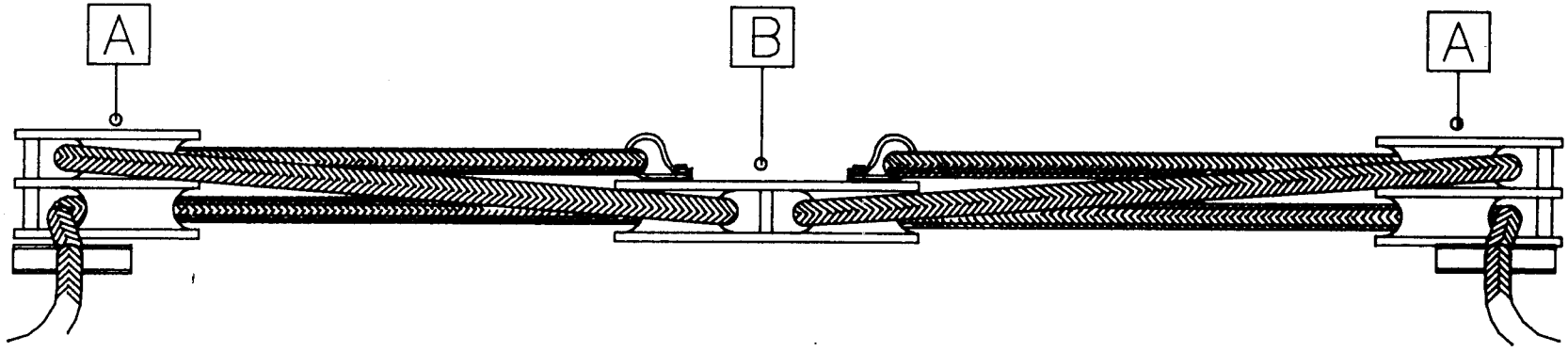

A DOUBLE BLOCK WITH CAM CLEAT
SCHAEFER #74-56 (PORT)
SCHAEFER #74-57 (STB)

B TRAVELER CAR #72-83 (4 WHEEL CAR)
#72-78 (6 WHEEL CAR)

C TRAVELER BAR

D END STOP

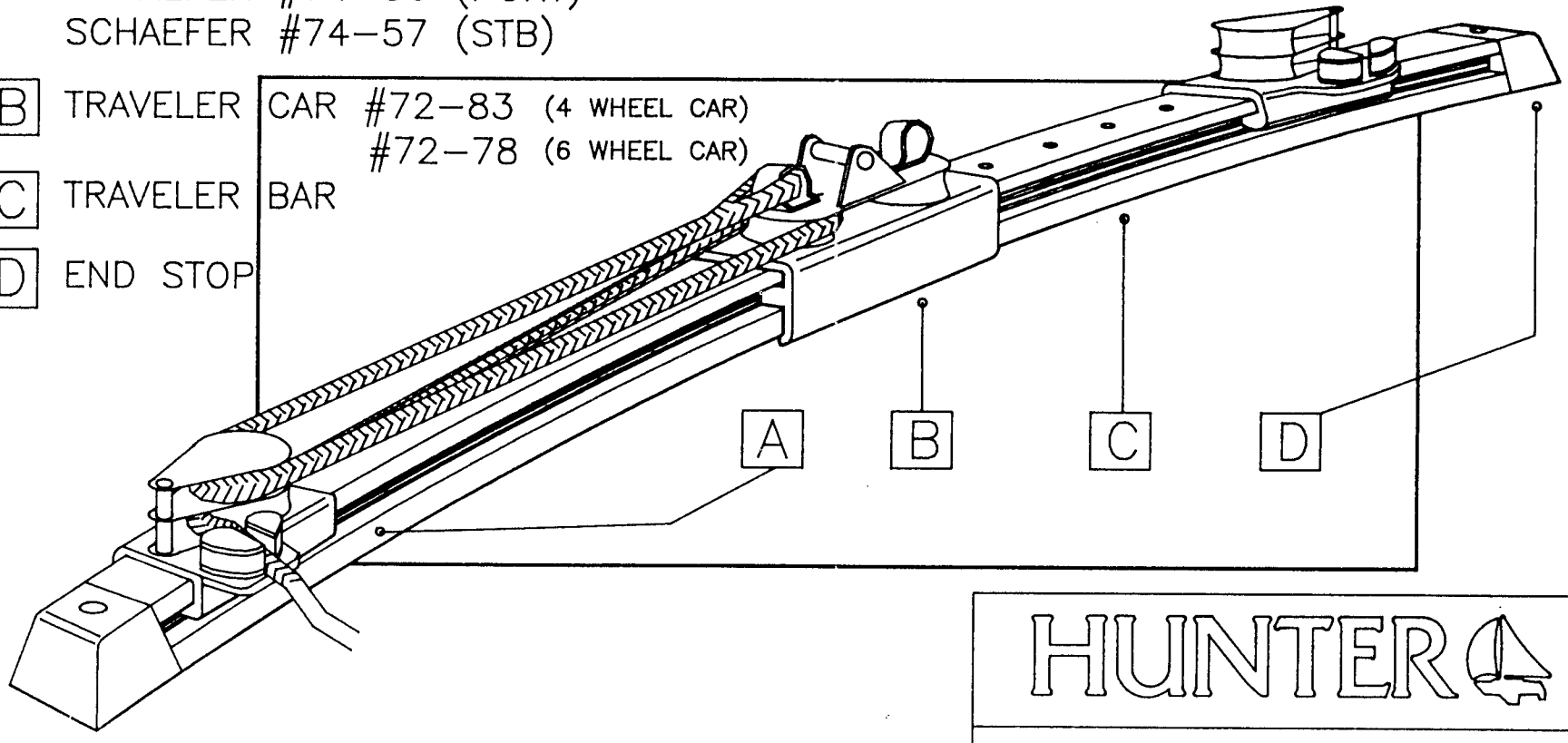

HUNTER

TRAVELER DETAIL GEN2611A

Ref. H355.1

LEGEND 35.5 RIGGING SPECIFICATIONS

STANDING RIGGING

DESCRIPTION	WIRESIZE	FITTINGS UPPER END	FITTINGS LOWER END*	OVERALL LENGTH
Forestay	9/32	marine eye	9-16-16	44'9 1/2"
Backstay	7/32	stemball w. cup	O.S. marine eye	41'9 1/2"
Bridles	3/16	O.S. marine eye	6-12-12	10'7"
Uppers	9/32	stemball w. shell	9-16-16	41'8 1/4"
Intermediates	7/32	stemball w. cup	7-12-12	29'9 1/4"
Lowers	9/32	stemball w. cup	9-16-16	15'11 3/4"

All wire is 1x19 stainless steel.
Backstay is attached to bridle with two splitter plates and three pins- 7/16", 3/8", 3/8".

* "X-X-X" represents the turnbuckle size as follows:
wire size-body size-pin diameter in 32nd's of an inch
example: 7-12-12 is a turnbuckle that accepts a 7/32" wire, has a 3/8", (12/32"), thread diameter in the body, and uses a 3/8", (12/32") pin.

RUNNING RIGGING

LINE	SIZE	ATTACHMENSTS	OVERALL LENGTH
Main Halyard	7/16"	HEADBOARD SHACKLE	118'
Jib Halyard	7/16"	SNAPSHACKLE	102'
Main Sheet	7/16"	EYE SPLICE	54'
Jib Sheets	7/16"		44'
Furling line	7/16"		75'
Traveller Control Lines	3/8"	EYE SPLICE	18'
Vang Line	3/8"	EYE SPLICE	45'
Topping Lift	3/8"		67'
Anchor Line	7/16"	SHACKLE	150'

All lines low stretch Dacron except anchor line which is Nylon.

All rigging is supplied by SECO SOUTH.

LEGEND 35.5 DECK LAY-OUT (see diag.)

PART	MANUFACTURER	MFG.#	HUNTER PART #
1. Swim ladder	Custom	NA	HW2168
2. Fuel deck fill	Nordic	6125-03	PL1126
3. Mooring cleat aft	Y/S	YS7107F-10"	HW0977
4. Stern rails (pt. & stbd.)	Custom	NA	HW2290
Stern light	Hella	62243B	EL0390
5. Primary winches	Barient	24-45	HW2546
6. Turning block	Schaeffer	501-39	HW0312
7. Pinboard extrusion	Custom	NA	HW0150
8. Halyard winches	Barient	17-CST	HW2540
9. Slider track extrusion	Custom	NA	HW0151
10. Triple sheet stopper	Garhaver	11-13	HW1280
11. Mainsheet traveller	Schaeffer	SK6198	HW0203
Car	Schaeffer	72-83	HW0204
Car control, port	Schaeffer	74-56	HW0206
Car control, stbd.	Schaeffer	74-57	HW0207
12. Genoa car	Schaeffer	32-98	HW0217
13. Genoa track	Schaeffer	SK6075	HW0216
14. Deck organizer	Garhaver	NA	HW0172
15. Chainplate	Custom	NA	HW1827/8
16. Stanchion	Custom	NA	HW2100
17. Opening port 5 x 12	Lewmar	8912	HW0049
Screen 5 x 12	Lewmar	NA	HW0049A-32
18. Mast step	Isomat	NA	RI0526
19. Mooring cleat FWD	Y/S	YS7107F-10	HW0977
20. Furling line thru deck	Schaeffer	34-46	HW0234
21. Bow rail	Custom	NA	HW2400
Light, port	Hella	62245B	EL0366
Light, stbd	Hella	62244B	EL0365
22. Water fill	Nordic	6124-00	PL1130
23. Bow Roller	Custom	N/A	HW1597

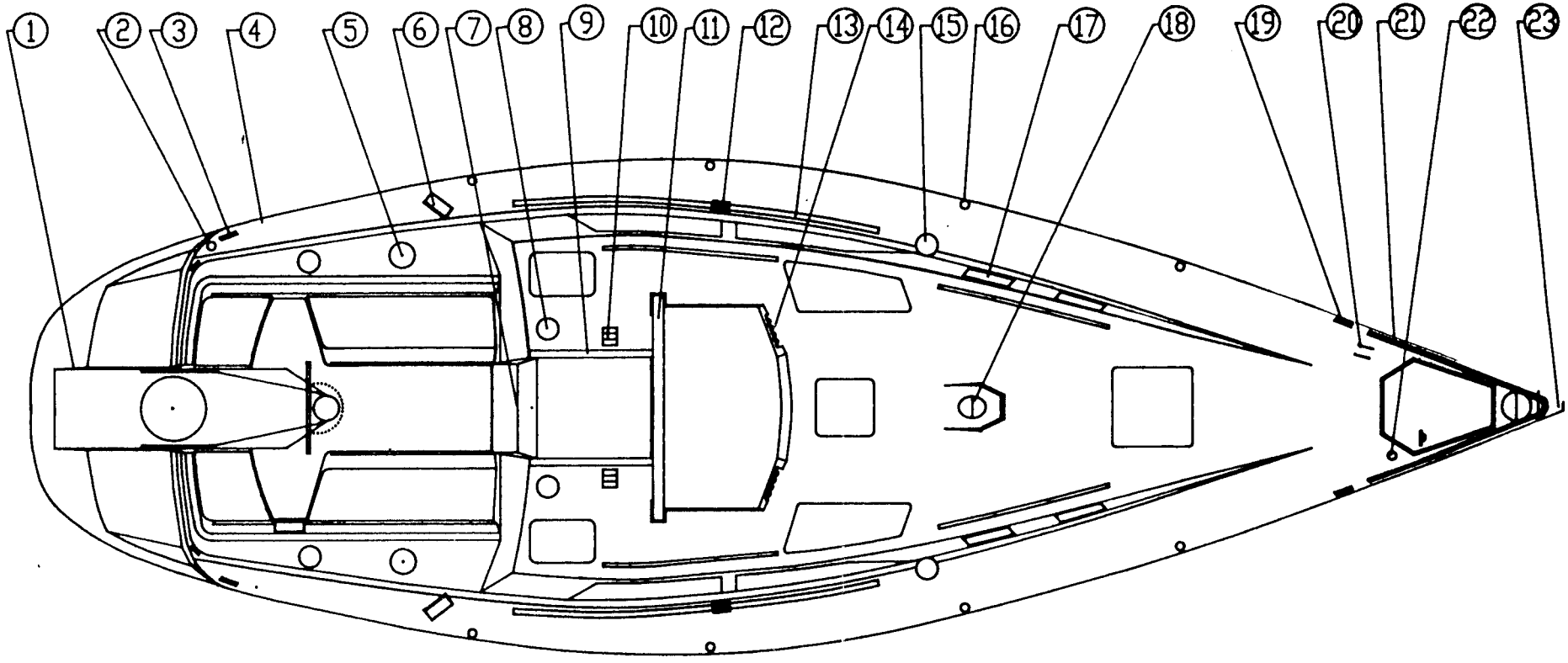

HUNTER

H35.5 DECK LAYOUT H35A2633

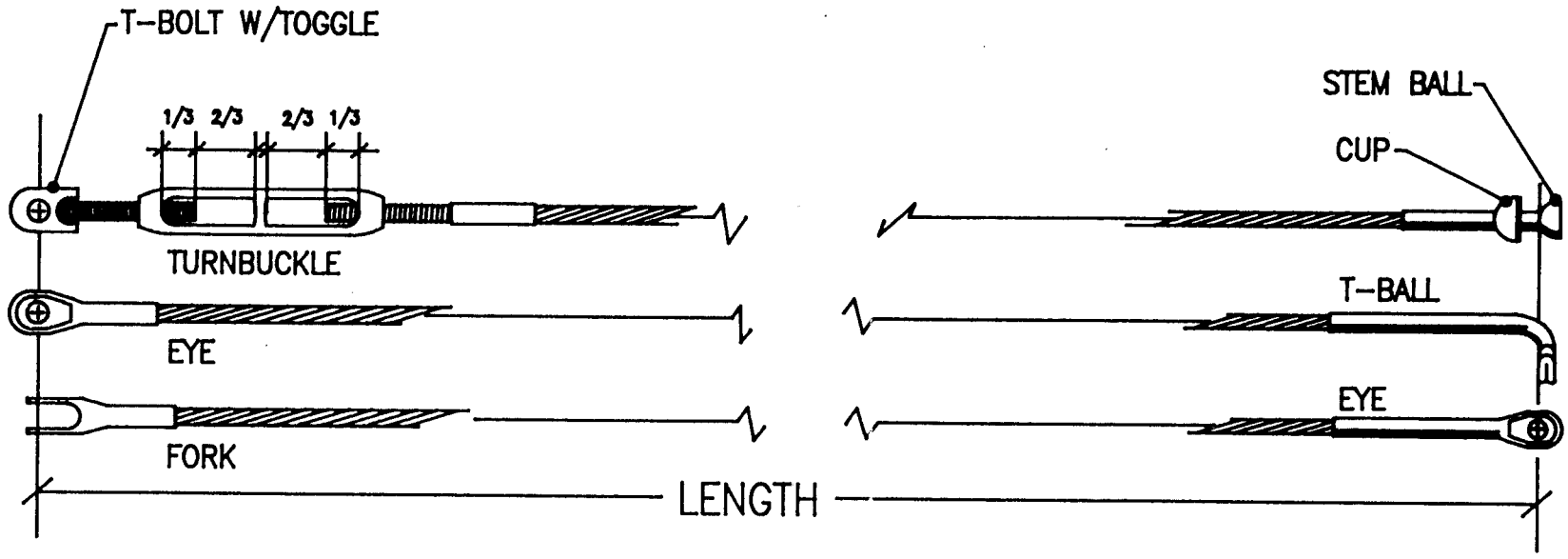

HUNTER

RIGGING LENGTHS GEN2605A

DECK FITTINGS

#	ITEM	LINE	QUAN.	VEND. AND MOD.	NOTES
1	SPINN. SHEET WINCHES	7/16"	2	BARIENT 24	
2	SPINN. SHEET BLOCKS	7/16"	2	SCHAEFER 701-15	
3	SPINN. POLE W/ ENDS		1	ISOMAT 12'-2"	
4	SPINN. POLE TRACK			ISOMAT	BLT. INTO MAST
5	SPINN. POLE CAR			ISOMAT	CAR & HAULG GEAR
6	SPIN. SHEET SHACKLE GRD.	7/16	2	SCHAFER 45-50	1 (GREEN) 1 (RED)
7	SHEET STOPPERS		2	GARHAUER SINGLE, SS	1 PORT 1 STBD.
8	PAD EYE		1	SCHAFER 78-07	FORE GUY
9	FAIRLEAD		3	SCHAFER 78-51	FORE GUY
10	BLOCK W/SNAPSHACKLE		1	SCHAFER 501-09	FORE GUY
11	SPINN. TOPP. LIFT SHEAVE		1	ISOMAT	
12	CAM CLEAT W/ FAIRLEAD		1	SCHAFER 70-33	FORE GUY
13	SPINN. POLE BRIDLE		2	ISOMAT	FORE GUY/TOP.LIFT

LINES

LETTER			LENGTH	SHACKLES	VENDOR
A	SPINN. HALYARD	7/16"	105'	MERRIMAN 7210-220	SECO SOUTH
B	SPINN. SHEETS	7/16"	2 @ 70'	MERRIMAN 7210-220	SECO SOUTH
C	SPINN. TOPPING LIFT	3/8"	70'	MERRIMAN 7210-220	SECO SOUTH
D	SPINN. FORE GUY	3/8"	55'	MERRIMAN 7210-220	SECO SOUTH
E	SPINN. CAR CONTROL LINE	3/8"	30'		ISOMAT

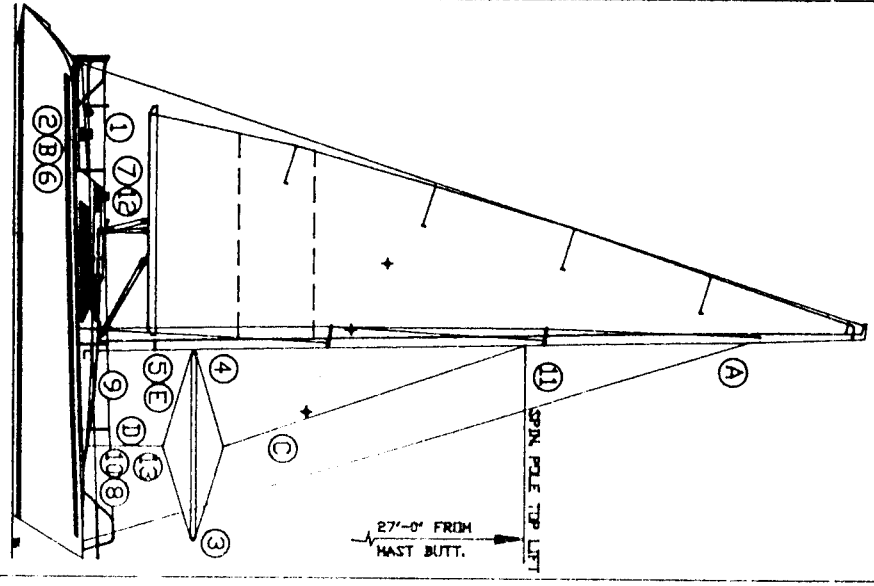

HUNTER

SPINNAKER PACKAGE H352622B

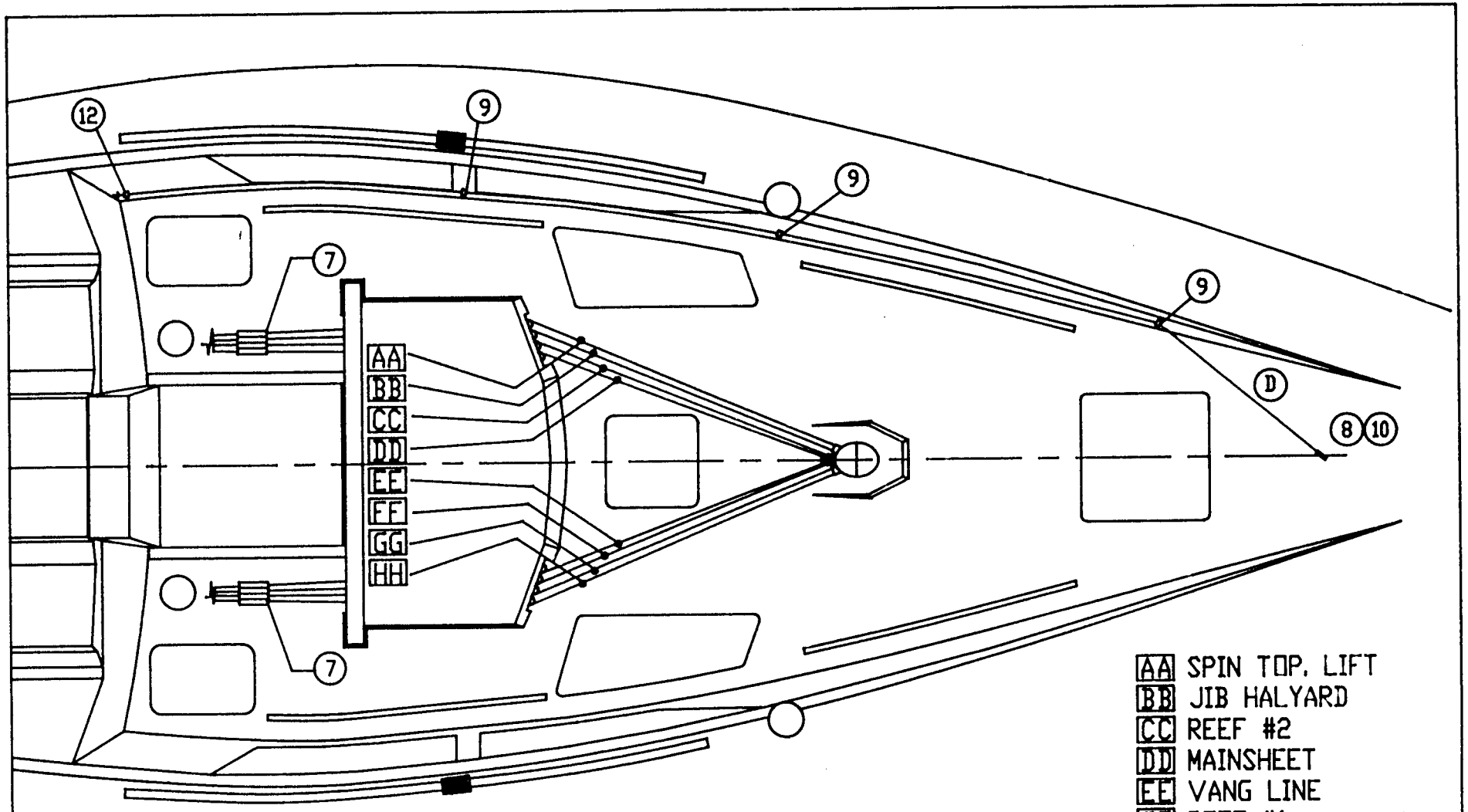

AA SPIN TOP. LIFT
BB JIB HALYARD
CC REEF #2
DD MAINSHEET
EE VANG LINE
FF REEF #1
GG MAIN HALYARD
HH SPIN. HALYARD

D SPIN. FORE GUY
7 SHEET STOPPERS
8 PAD EYE
9 FAIRLEAD
10 BLOCK W/ SNAP SHACKLE
12 CAM CLEAT W/ FAIRLEAD

HUNTER

SPINNAKER PACKAGE H352621A

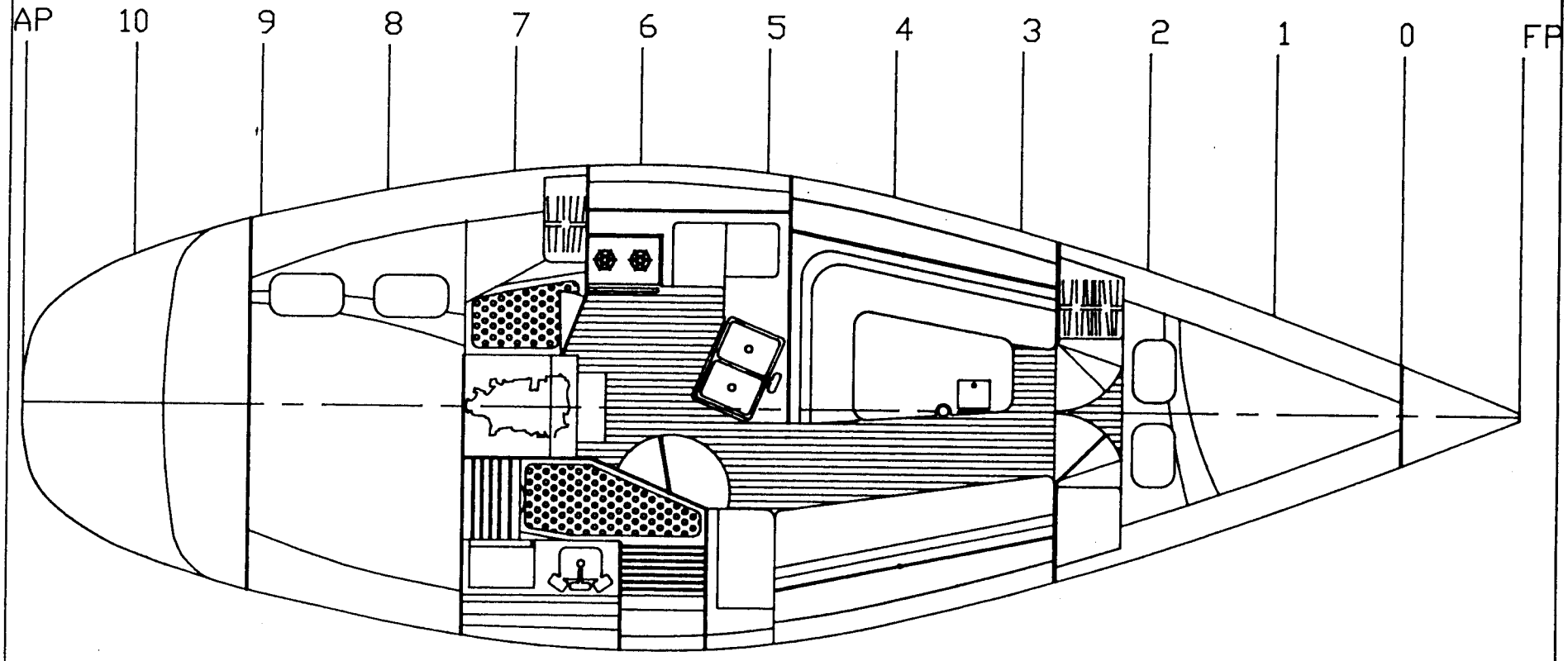

HUNTER

H35 INTERIOR H352624A

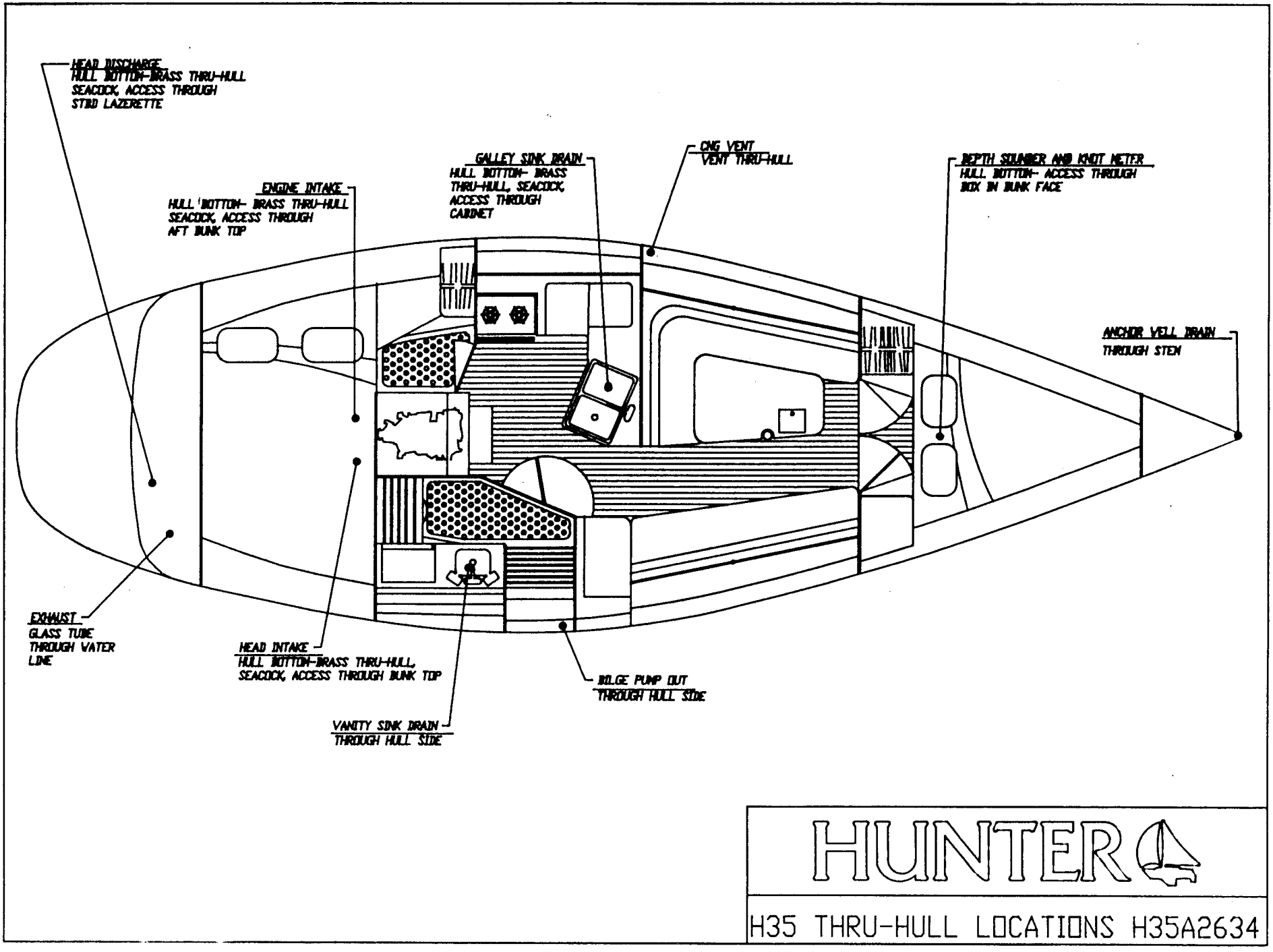

HUNTER

H35 THRU-HULL LOCATIONS H35A2634

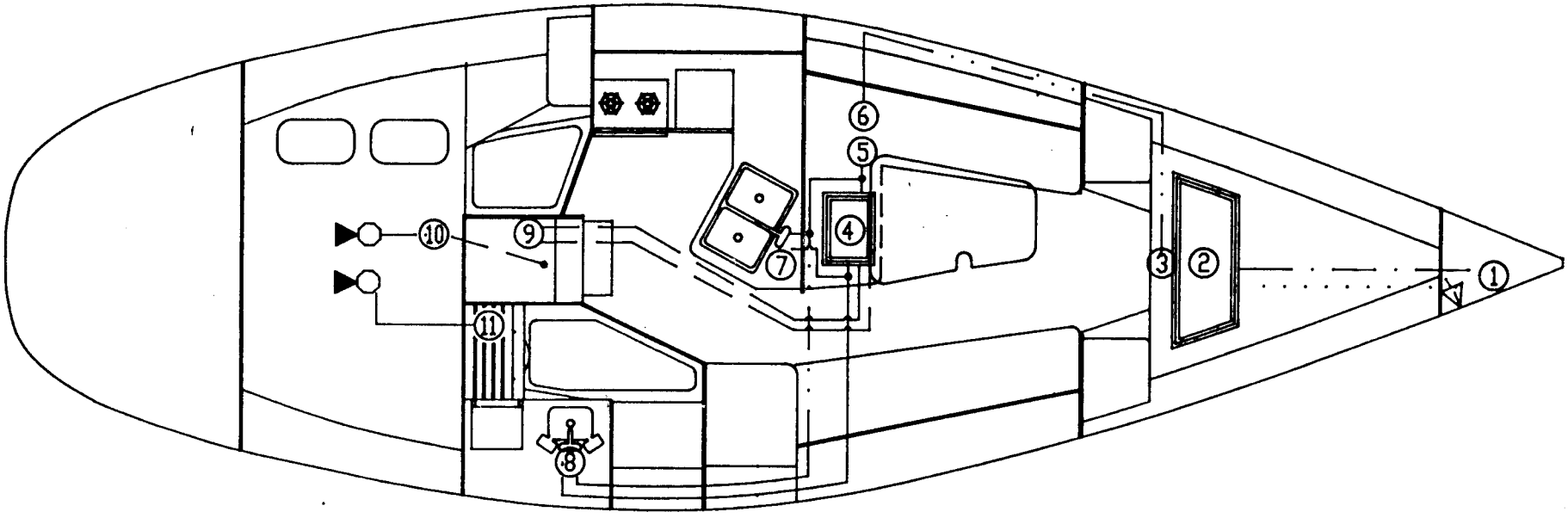

① TANK FILL
② WATER TANK
③ TANK FITTING
④ WATER HEATER
⑤ PRESSURIZED WATER PUMP
⑥ PUMP STRAINER
⑦ GALLEY FAUCET
⑧ VANITY FAUCET
⑨ HEAT EXCHANGER
⑩ ENGINE STRAINER
⑪ HEAD INTAKE

○ BALL VALVE
▽ PLASTIC THRU-HULL
▼ BRONZE THRU-HULL
▽ TANK VENT

PL1405 ———— 3/4" WATER
PL1527 — — — 5/8" SHIELDFLEX
PL1825 ———— 1/2" POLY HOT
PL1825 — · · — 1/2" POLY COLD
PL1440 — · — 1 1/2" SHIELDVAC
PL1450 · · · · · · · 3/4" SHIELDVAC

HUNTER

SUPPLY WATER SYSTEM H35A2640

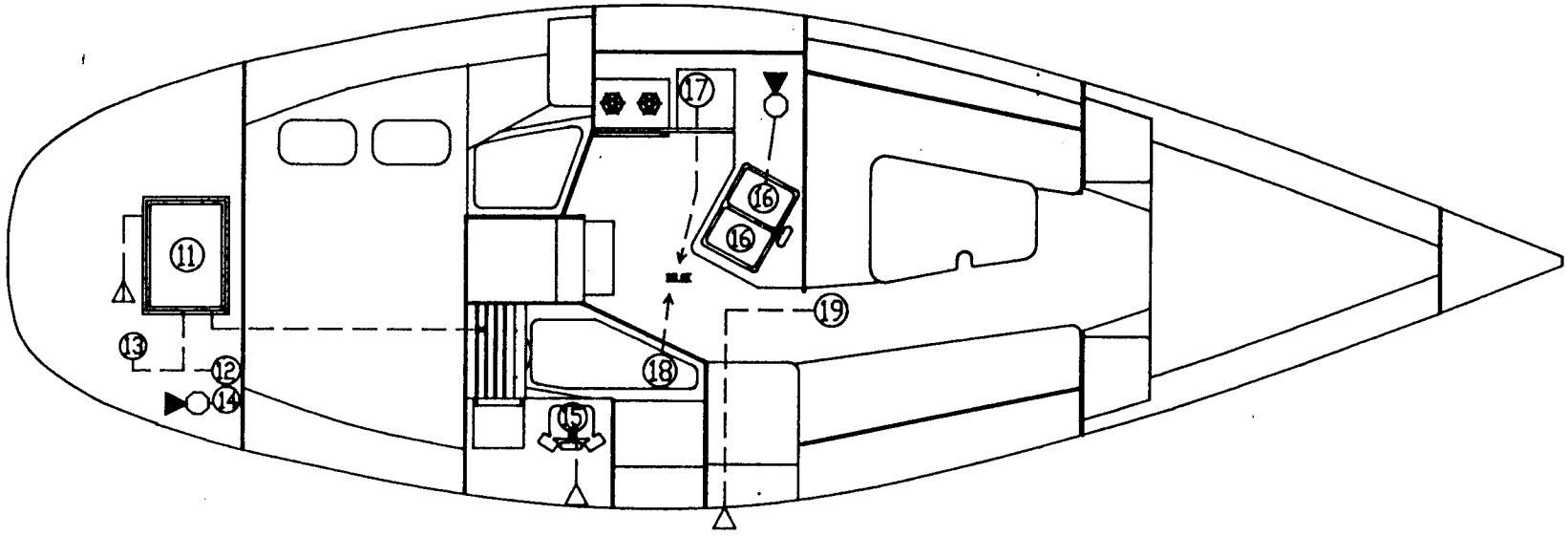

⑪ WASTE TANK
⑫ HAND PUMP
⑬ DECK PLATE
⑭ VENT LOOP
⑮ VANITY DRAIN
⑯ GALLEY DRAIN
⑰ ICE BOX DRAIN
⑱ SHOWER DRAIN
⑲ BILGE PUMP

○ BALL VALVE
▽ PLASTIC THRU-HULL
▶ BRONZE THRU-HULL
▽ TANK VENT

HUNTER

H35 WASTE WATER SYSTEM H35A2641

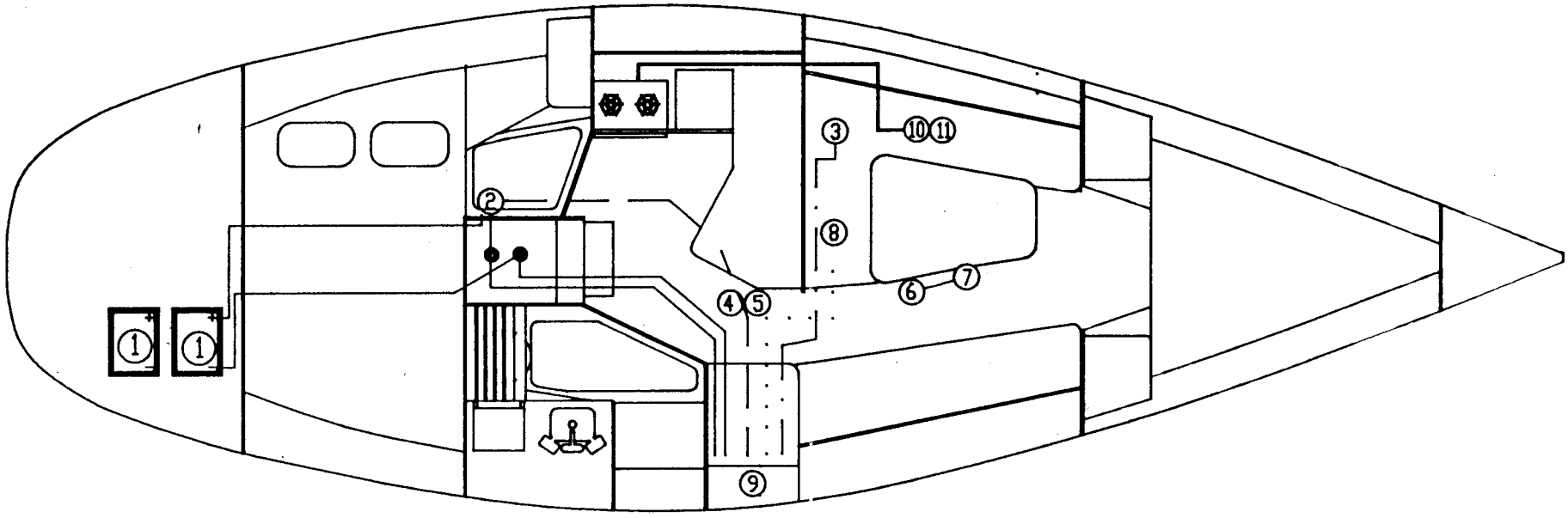

① BATTERY 72 AMP
② SELECTOR SWITCH
③ WATER PUMP
④ FLOAT SWITCH
⑤ BILGE PUMP
⑥ GROUNDING PLATE
⑦ MAST POST
⑧ WATER HEATER
⑨ ELECTRICAL PANEL
⑩ CNG TANK
⑪ REGULATOR

1/0 BATTERY CABLE
12 GA. WIRE (BILGE PUMP)
10 GA. WIRE (PANEL LIGHT)
8 GA. WIRE (MAST & CHNPLT. GROUND)
12 GA. WIRE (WATER PUMP)
14/3 DUPLEX WIRE (WATER HEATER)
CNG HOSE

HUNTER

H35 PAN SCHEMATIC H35A2642

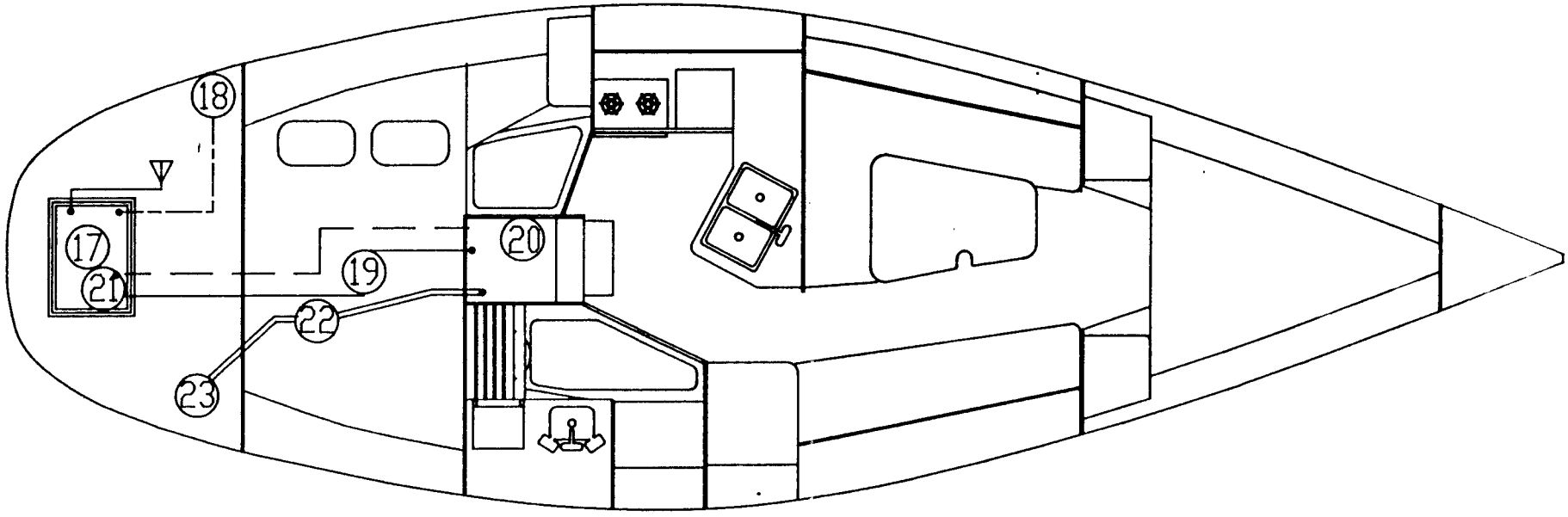

⑰ FUEL TANK
⑱ FUEL FILL
⑲ FUEL FILTER
⑳ FUEL RETURN
㉑ FUEL VALVE
㉒ MUFFLER
㉓ GLASS THRU-HULL
▽ TANK VENT

PL1395 ———— 5/8" FUEL HOSE
PL1410 — — — — 1/4" FUEL HOSE
PL1530 —— – —— 1/ 12/" FUEL FILL
PL1625 ═══ 2" CORRUGATED

HUNTER

H35 FUEL SYSTEM H35A2639

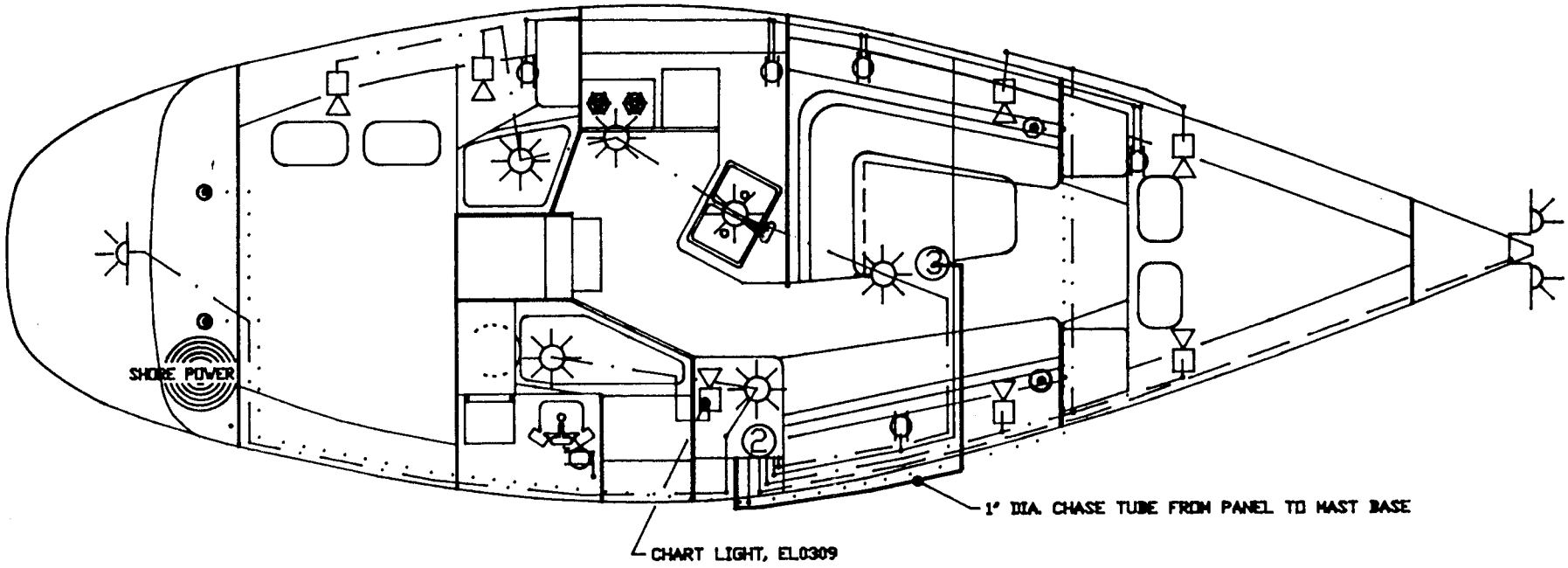

SINGLE LIGHT - EL0345 16 GA BLUE, 16 GA BLACK
SWIVEL LIGHT - EL0347 16 GA BLUE, 16 GA BLACK
STERN LIGHT - EL0390 16 GA BLACK, 16 GA WHITE
BOW LIGHT - STBD - EL0365 16 GA BLACK, 16 GA WHITE
BOW LIGHT - PORT - EL0366 16 GA BLACK, 16 GA WHITE
SPEAKER 16 GA BROWN (PORT), 16 GA YELLOW (STBD) 16 GA BLACK (COMMON)
110V RECEPTACLE 14/3 BOAT CABLE
② ELECTRICAL PANEL
③ MAST

WIRE HARNESS "A"

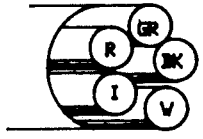

SYMBOL	COLOR	GAGE	APPLICATION
GR	GREEN	16	MAST, STEAMING LIGHT
R	RED	16	MAST, ANCHOR LIGHT
BK	BLACK	16	COMMON, STEAMING & ANCHOR
V	WHITE	COAX.	VHF RADIO ANTENNA
I	BLACK	INST.	INSTRUMENTS

NYLON MESSENGER STRING

HUNTER

H35 HEADLINER SCHEMATIC H352638

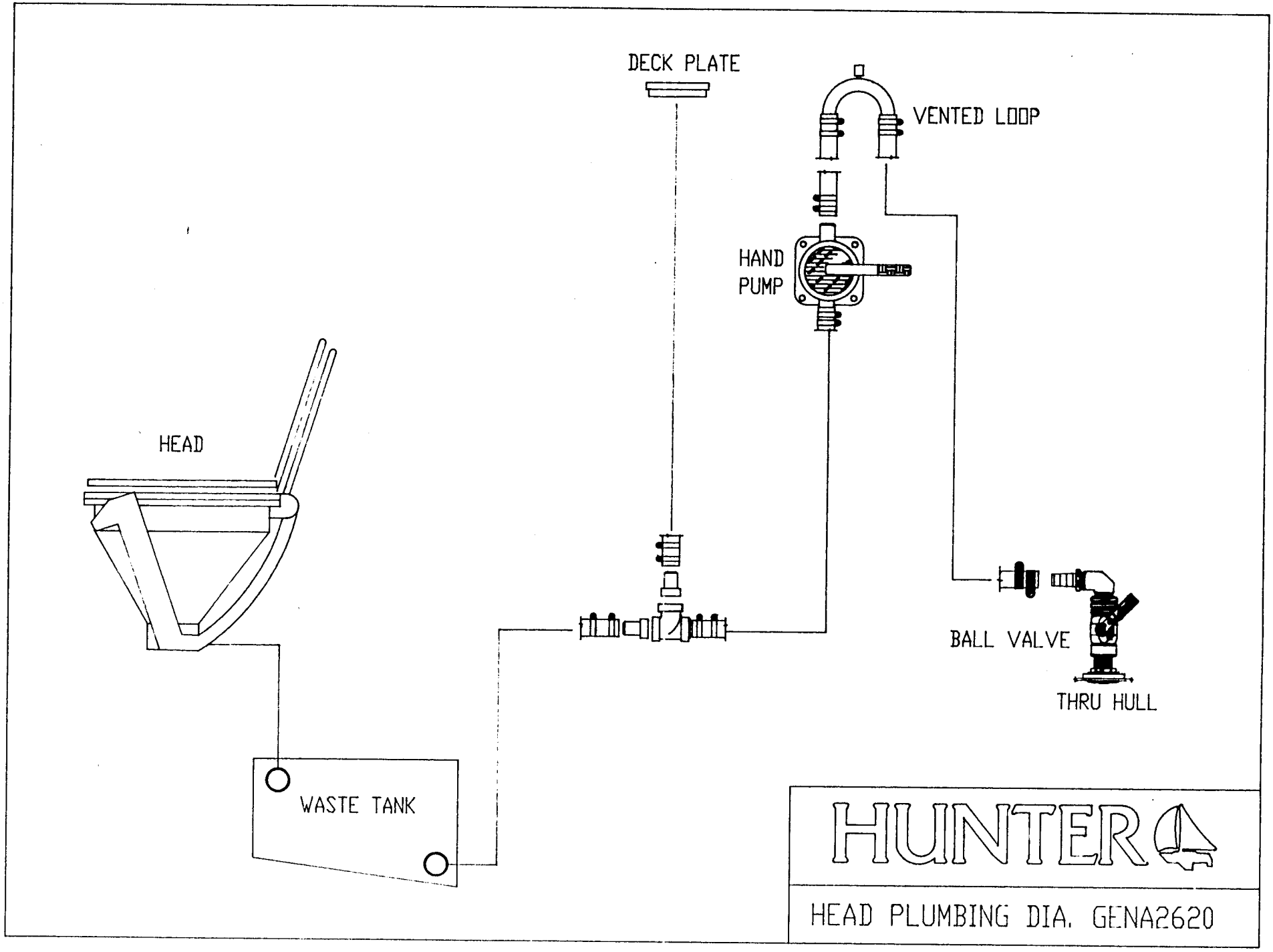
DECK PLATE
VENTED LOOP
HAND
PUMP
HEAD
BALL VALVE
THRU HULL
WASTE TANK
HUNTER
HEAD PLUMBING DIA. GENA2620

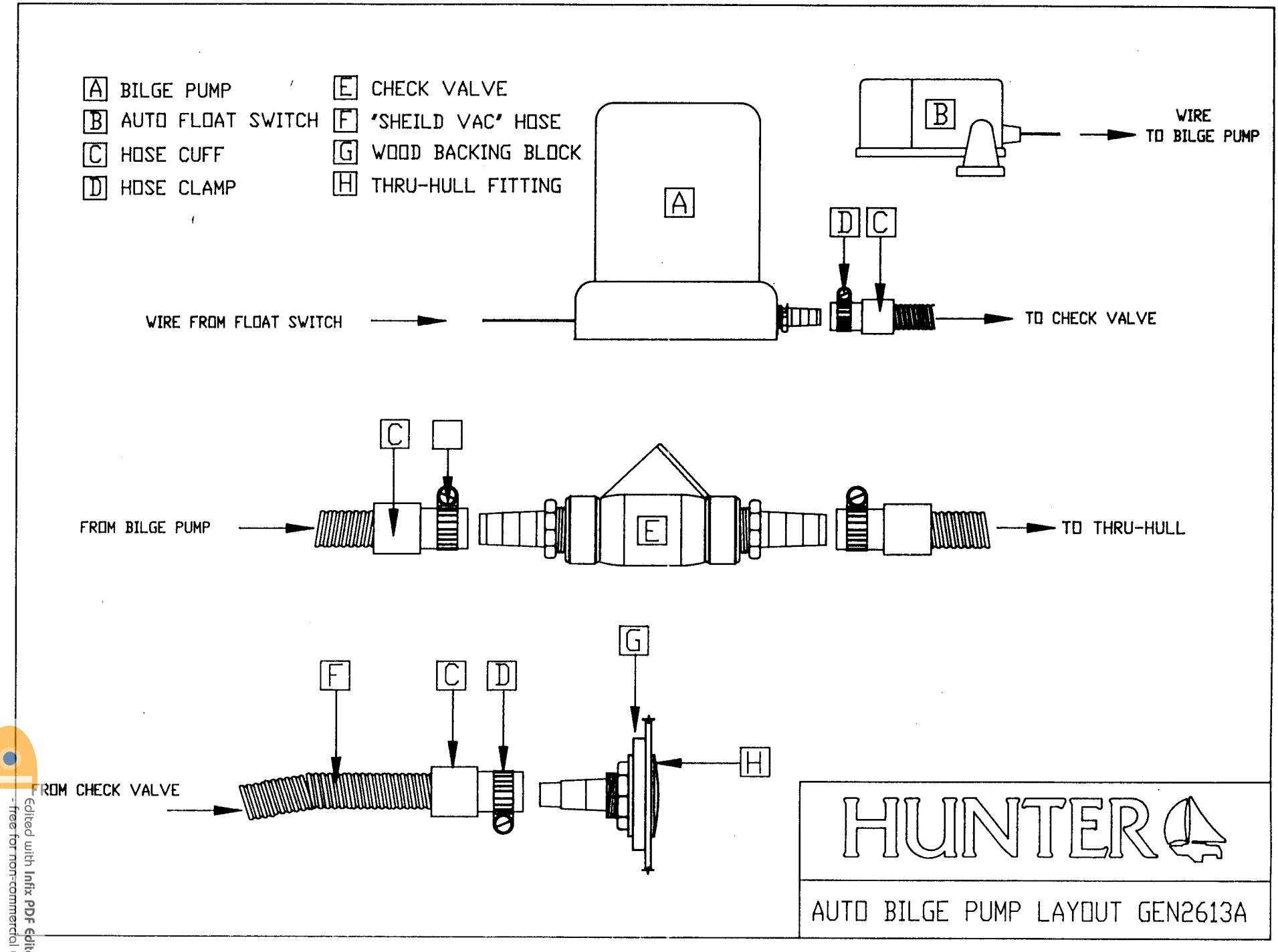

Edited with Infix PDF Editor - free for non-commercial use.
To remove this notice, visit: www.iceni.com/unlock.htm

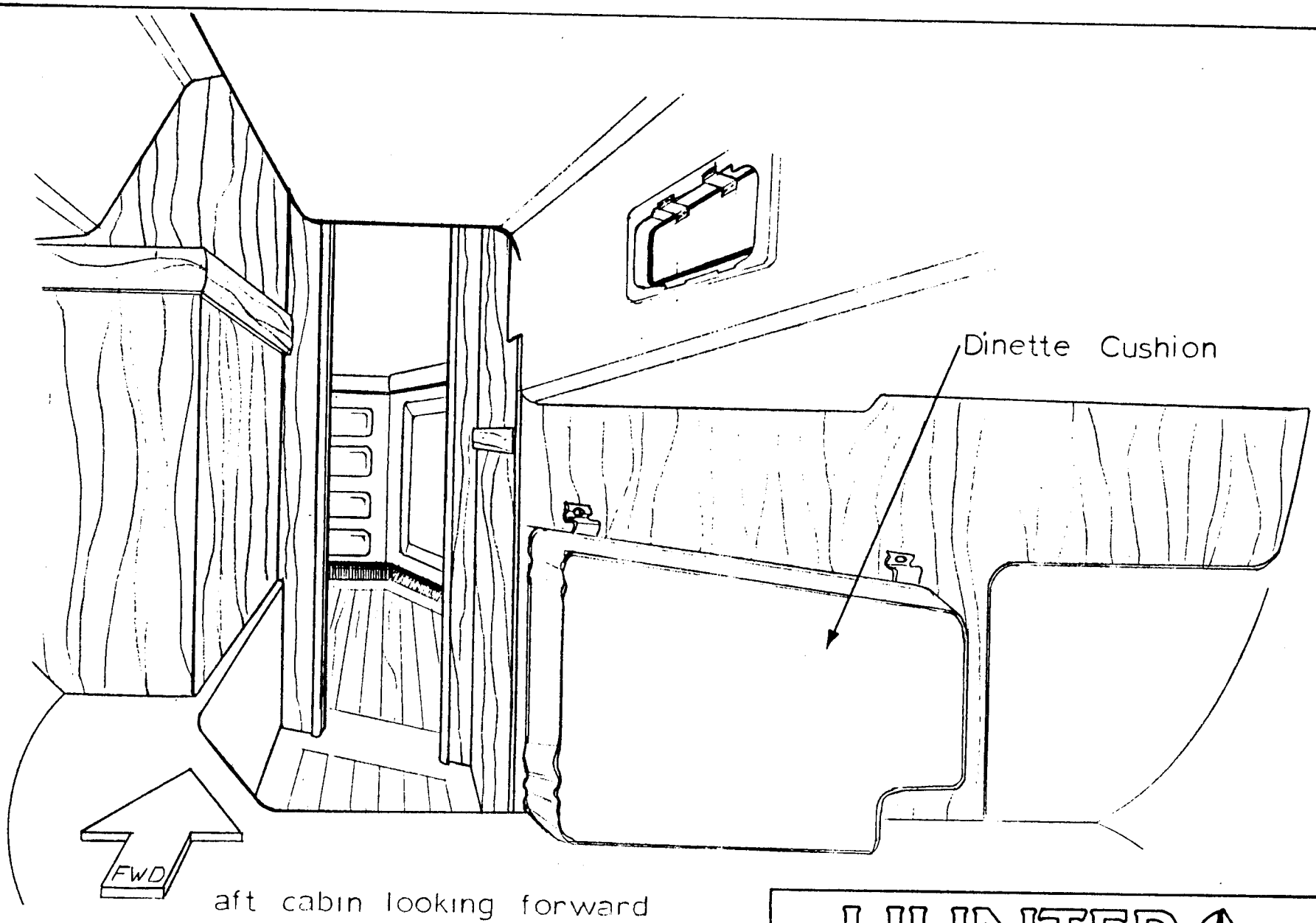

HUNTER

Cushion Storage H35.5A2619

LEGEND 35.5 LIGHT BULB SPECIFICATIONS

Your Legend 35.5 has 13 interior lights, three navigation lights and two lights on the mast. Of the interior lights 6 are dome lights, 6 are swivel lights and 1 light is removable from its bracket and installed over the chart table.

LIGHT	REPLACEMENT BULB
Dome	#1572 and Wagner #S8-1141
Swivel	#1831 and Wagner #S8-1073
Chart	Aqua Signal #90400282
Red bow	Osram 12V #6411, 24V #6429 Philips 12V #12866, 24V #13866
Green bow	same as above
Stern	same as above
Running	Perko 68 12V 20W
Anchor	Aqua Signal #90400200

PUMPS, STRAINERS, FILTER

Component	Manufacturer and part number
Bilge pump	Rule 800 or Mayfair 800
Waste pump (manual)	ITT Jabsco #142M
Water pump	ITT Jabsco Flo-Jet #4405-143
Strainer for pressure water	ITT Jabsco #364-00
Strainer for engine	1/2" Perko #493-4
Fuel filter	Racor #110

GALLEY/HEAD SYSTEMS

WATER SYSTEM OPERATION

Fill fresh water tank at deck fill. The tank filler cap will be marked "water". When tank is full, water will back up through the vent hose and exit through a vent located on the side of the hull

To activate the water system, flip the "water pressure" switch on the electrical panel. This will start the pump and pressurize the system. When the pressure builds, the pump will shut off . With continued use of fresh water the pressure in the system is reduced, automatically re-starting the pump. Make sure there is water in the system while pump is in operation to prevent damage to the motor.

If pump kicks in frequently without system use, you may have a leak in the system and it should be checked. **Do not activate water heater unless there is water in the system.**

Opening the faucet will allow the pump to empty the tank. Flushing the tank and lines will be necessary for winterization. Refer to Maintenance & Winterization section for more information.

To operate shower, turn on hot & cold faucets until desired temperature is reached, while shower head is retracted at sink. Pull the shower head out and use. An "on-off" valve is located on the upper most portion of the shower head. This can be used to stop water flow at the head. However, this will not stop water flow at the sink. The faucets must be turned off to prevent system drainage.

INSTRUCTIONS FOR PREPARATION FOR BOTTOM PAINTING

WARNING!

Do not use any sanding, sandblasting or other abrasive preparation of the bottom as this will void your hull blistering warranty. More information on the warranty is available in this owner's manual.

BOTTOM PAINTING

Choose a bottom paint system that suits the environment in your area.

Follow the procedure recommended by the manufacturer of the paint, while making sure not to void the Hunter Hull Blistering Warranty. The procedure for preparing for and painting the bottom varies between paint manufacturers, but should always include dewaxing, etching and sometimes priming of the surface.

The rudder should always be bottom painted using a white bottom paint, to avoid heat build-up in the rudder, which colored paints can contribute to, when the boat is on land. For further instructions on preparation of the rudder, see the instructions sheet from *Foss Foam, Inc.* under the General Information heading within this manual.

TEAK CARE

Teak wood is a high quality, extremely durable wood with a high oil content. In order to help you protect the original beauty of your teak interior, we have sealed the beauty of your interior with a 3 to 4 coat finish system of high quality Seafin Teak Oil, manufacturered by *Dalys* (wood finishing products). This material is a penetrating oil that dries to a low sheen to seal and protect the wood from moisture and weathering. It creates a durable, non-slip surface to repel water and resist wear. It won't chip, peel or blister. It reduces work and maintenance cost because it is easy to maintain and repair. With proper maintenance it will out live urethane varnish on interior and even exterior surfaces. (floor, bulkheads, trim wood & furniture).

MAINTENANCE

When oiled surfaces require renewing, simply wipe the surface area free of loose dirt, dust or other contaminants. Dampen a cloth with the Seafin Teak Oil and wipe on. Let stand for 5-15 minutes then polish dry.

REPAIRS

When wood work is damaged from scrapes or abrasions that go into or thru the finish, take the following steps:

1. Take 180 to 220 grit wet/dry sand paper to smooth out rough spots.
2. Wipe clean of dust and dirt with a clean rag. Note - before applying oil wood surface must be dry.
3. Wipe or brush on oil, allow to penetrate 5-15 minutes while surface is still wet.
4. Sand until smooth with a 400A wet/dry sand paper.
5. Wipe dry with a clean rag. Allow 8-12 hours drying time.
6. Apply 2nd coat, and repeat above procedure.

This process may be repeated as many times as needed to bring damaged area back up to its original finish. If you have trouble with getting the same sheen, you may apply with a completely dampened/ rung out rag, a very light coat over this area and/or whole surface area to get an even sheen.

DALYS
3525 STONEWAY NORTH
SEATTLE, WA 98103
(206) 633-4200

CARE AND CLEANING OF ACRYLIC PARTS

DONT'S

- Do not subject acrylic material to high temperatures when polishing.
- Do not use glass cleaning sprays, scouring compounds, or solvents like acetone, gasoline, benezene, carbon tetrachloride or laquer thinner.
- Do not use masking tapes, duct tapes or packing tapes on your acrylic materials.
- Do not drill holes without proper drill bits in your acrylic materials (special bits are used in acrylic material to avoid damage).

DO'S

- Wash your acrylic hatches, windshields, and other acrylic components on your boat with a mild soap and plenty of lukewarm water.
- Use a clean soft cloth, applying only light pressure.
- Rinse with clear water and dry by blotting with a damp cloth or chamois.
- Grease, oil or tar may be removed with a good grade of hexane, aliphatic naphtha, or kerosene. These solvents may be obtained at a paint or hardware store and should be used in accordance with the manufacturers recommendations.
- To maintain a high-luster finish on your acrylics, we recommend that after properly cleaning, apply Meguiars Mirror Glaze #10 with a soft towel. Note: If slight scratches appear on acrylics, use Meguiars Mirror Glaze #17.

MAINTENANCE

Engine, Transmission and Drivetrain

ENGINE: Follow the fuel and lubrication requirements in the Engine Manual. Check the engine oil level before and after operation and use quality motor oil (refer to Engine Manual). Be certain the proper amount of oil is in the crankcase at all times.

Engine alignment: The engine should be aligned by experienced marine service personnel. Final alignment should be done after launching, with all normal gear aboard. A description of the procedure follows:

> The coupling flanges must come together evenly at all points, a feeler gauge is used to check the gap. If adjustment is necessary, the engine is tilted up or down and/or side to side until the flanges meet equally. Severe vibration will result from misalignment and can cause strut bearing and shaft damage.
>
> Alignment should be checked again after several weeks of use.
>
> (Refer to this manual's alignment drawing)

Any questions or problems concerning the engine, please contact our distributor, Mack Boring at (201) 964-0700.

TRANSMISSION: Follow the lubrication requirements of the Engine Manual. The oil level should be checked immediately after operation.

DRIVETRAIN: The shaft log (stuffing box) should be inspected periodically.

The stuffing box is held to the shaft log tube by a rubber tube secured by hose clamps. The clamps should be tight and no water should leak from this location. A slight drip from the stuffing box at the shaft exit is necessary (four drops a minute) and is normal.

To adjust, loosen the lock nut, tighten gland nut one-quarter turn, and retighten lock nut. If excessive water flow persists after adjustment, replace the packing and then adjust as above.

Steering

Refer to the manufacturer's instructions for maintaining pedestal steering system. Cables should routinely be inspected for proper tension. Lightly oil all cables.

Electrical Systems

The electrical system is a 12-volt, negative ground installation. The owner should weekly inspect battery(ies), terminals and cables for signs of corrosion, cracks, and electrolyte leakage. Battery terminals are to be kept clean and greased. Refer to separate instructions on batteries, wiring diagram, and electronics.

MAINTENANCE

Plumbing Systems

All pumps should be checked frequently to insure proper operation. **This is an especially important regular maintenance item since proper functioning of a pump could save your vessel from serious damage in the future.**

Inspect all hoses for chafing and dry rot. See that hose clamps are tight. Check that the pump impeller area is clean and free of obstructions.

Inspect electrical wiring for corrosion. Make sure float switches move freely and are making an electrical connection. Refer to Engine Manual.

The owner should become familiar with the layout of the water and waste systems by walking through the boat with the diagrams provided in this manual. It is especially important that the owner knows all thru-hull valve locations and inspects for leaks frequently. Refer to plumbing diagrams in Spec & Tech section.

General Thru-hull List (*varies from boat to boat-see diagrams in Spec & Tech Info.)*

1) Engine cooling system
2) Galley sink
3) Head sink
4) Head toilet (water intake)
5) Holding tank discharge
6) Scupper drains

Fuel System

The owner should inspect the condition of fuel lines for cracks or leaks. A primary source of fuel-related problems is water in the system. The owner should seek out only well maintained fueling facilities and make sure fuel fill caps are tightly secured after filling. Check and maintain fuel filters periodically. Refer to your Engine Manual for additional information.

General Care

CLEANING FIBERGLASS SURFACES: Fiberglass surfaces should be cleaned regularly. Normal accumulations of surface dirt can be removed simply by occasional rinsings with water. If your boat is operated in salt water, more frequent rinsing will be required. To remove stubborn dirt, grease or oil, use a mild detergent and a soft brush. Rinse with clean fresh water.

It is also a good idea to wax the fiberglass once or twice a year to maintain a deep , glossy appearance. Your local marine supply should be able to provide an appropriate wax.

Sail Care: Sunlight is a sail's worst enemy, so cover the sails when they are not in use. An ultraviolet guard, fitted down the leech of a roller headsail, will protect the exposed part from the weathering effect of the sun and from dirt and grit. Mildew, which discolors, is prevented by storing sails dry and by hand-washing twice a season.

Electrolysis and Galvanic Protection

Salt water allows electric current to flow from anodic to cathodic material. Any two metals from two components, and their relative positions in the galvanic rating table, will determine which loses material (the anode) and which remains largely undisturbed (the cathode). The rate of wear is determined by the distance apart on the galvanic table of two metals. Thus a sacrificial zinc anode is often fitted to the underwater area of a boat to attract any destructive currents away from bronze or steel propeller shafts, for example.

It is not enough to know that your boat does not suffer from electrolysis: a newcomer in the adjacent marina berth may start a too-friendly association with metal components on it. An easy place to fit an anode is on the propeller shaft, or covering the propeller nut. The anode should not be painted because this will only defeat the purpose.

To prevent electrolysis in sea water, the difference between the voltage of two adjacent metals should not exceed 0.20V. Zinc and carbon steel, for example, used together, risk corrosion, while lead and active stainless steel are compatible. Metals with a high voltage corrode faster and need a larger area to diffuse the electro-chemical reaction.

Sail care continued.

Check all sails regularly for chafe, particularly where they chafe on deck fittings or rigging, at reef points, batten sleeves and the foot of the headsail. Sail batten pockets should be inspected on a regular basis.

To stow the mainsail, start at the leech and flake it on to the boom, left and right, in about 18-in. (46-cm) folds, while pulling the leech aft. Secure with a sail tie and continue to the luff. Lash to the boom with sail ties or shock cord.

The headsail, neatly rolled and fastened, can be temporarily stowed along the lifelines. To stow below, flake it into a length; 1. then roll from luff to leech, 2. Take care not to crease the leech. Pack in a clearly marked bag.

Fabric Care

If wet, prop cushions vertically to promote airflow around each cushion. Cushions can be cleaned by most dry cleaners. Dry clean **only.**

Winch Maintenance

Follow the maintenance instructions prescribed by the winch manufacturer. We recommend a minimum of an annual cleaning and light greasing.

General Hardware Maintenance

Check all fittings regularly to be sure screws are tight. Occasionally lubricate (use silicone lubricants) all moving parts on such fittings as blocks, turnbuckles and cam cleats, as well as the locking pins of snatch blocks, track slides, spinnaker poles, etc. Inspect chocks, cleats and fairleads for roughness and smooth with fine grained emery paper if necessary. Also, replace any missing or damaged cotter pins in turnbuckles and shackles, and either tape them or use protective covers manufactured for that purpose.

Alignment Procedure

1. Seperate the coupling, move the shaft end back to clear the pilot in the center.

2. Establish the shaft in the center of the shaft log by raising the shaft until it touches the top of the log - note position - lower the shaft until it touches bottom of the log - note position - repeat sidewise and locate shaft in the center; block shaft in this position, using a block of wood under the shaft packing gland.

3. Now, adjust the engine mounts to allow the pilot on the coupling halves to slip together without moving shaft up, down, or sideways.

4. Adjust the engine mounts as necessary until a 0.004" feeler gauge will not enter anywhere along the edge of the flange between the faces.

5. Tighten the locks on the adjustable mounts.

6. Re-check coupling with feeler, re-adjust if necessary.

7. Check stuffing box (allow to drip slightly).

STEP 1

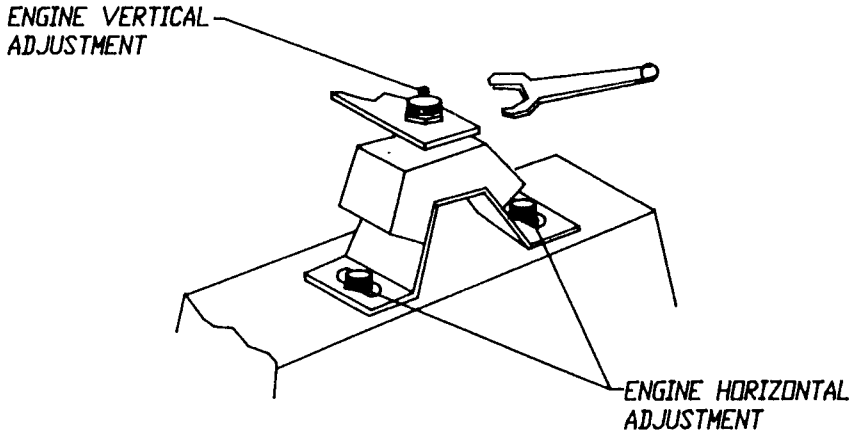

STEP 2

USE FEELER GAUGE TO CHECK COUPLING GAP. THE TOLERANCE SHOULD BE .004". MAKE SURE TO CHECK ALL THE WAY AROUND THE COUPLING.

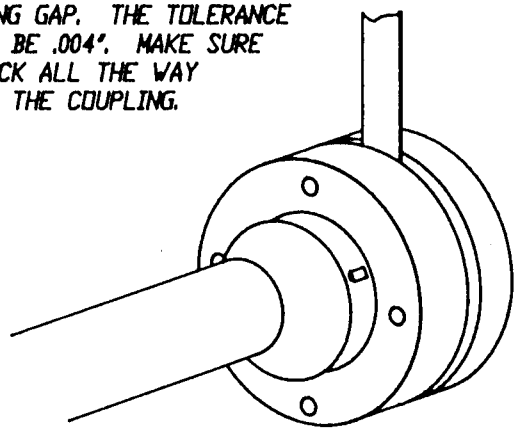

NOTE: CHECK COUPLING GAP WITHOUT COUPLING BOLTS IN PLACE.

HUNTER

ALIGNMENT DIAGRAM GEN2619A

STORAGE/WINTERIZATION

IMPORTANT: Winter storage is recommended to be done in one of the following three ways, either: 1) by blocking the boat via a cradle; or 2) with chained stands on level ground; or 3) by storing the boat in the water with a bubbler system to prevent icing. Damage to your boat, including engine misalignment caused by twisting, is not covered by the warranty.

SAILS
Sails should be properly folded and stowed in a dry, well ventilated place. Many sailboat owners send their sails back to the sail manufacturer at the end of each season. The sailmaker will check the stitching and sailcloth for wear and store the sails until the start of the next season.

ELECTRICAL
Remove battery from boat. (Refer to Engine Manual.) and charge. It is a good idea to also to remove the electronics (Radio, Radar, etc.) and store in a safe place.

CUSHIONS
Cushions should be removed and stored at home if possible. If not, prop them vertically to promote airflow around each cushion. *Dry Clean Only!*

HATCHES
Tenting the deck during storage will help prevent ice from forming and damaging hatches and deck fittings. The installation of a passive vent will help with ventilation while the boat is in storage.

WATER SYSTEM - WATER HEATER

WATER SYSTEM:
Open a faucet and allow the pump to empty the tank. Then add approximately two gallons of non-toxic anti-freeze solution to the tank and repeat the pumping out procedure.

A second method is to disconnect the hoses at the pump, allowing them to drain. Find the lowest point in the system and disconnect the fitting. Open all faucets to allow the lines to drain. If possible, use a shoret piece of hose on the faucet to blow through the lines to clear all water. A diluted solution with baking soda will help freshen the system.

WATER HEATER:
Open valve and drain fully. Leave valve open during lay-up time.

TOILET AND HOLDING TANK
Drain and flush toilet. Using automotive anti-freeze (ethyleneglycol) in a 50/50 mixture with water, pump through toilet and into holding tank. Refer to Galley/Head section for instructions.

STORAGE/WINTERIZATION CONTINUED.

ENGINE

1. Drain the cooling water completely out of the engine and flush the line thoroughly with fresh water. Don't use high pressure through the line.
2. Remove the fuel completely from all fuel lines.
3. Disconnect the main battery cables from the battery terminals.
4. To prevent corrosion inside the cylinders, pour a little lubricating oil into the suction pipe while turning the engine. Enough oil to reach the intake/exhaust valve is sufficient.
5. Put the piston at top dead center of compression stroke so that the intake/exhaust valves are completely closed.
6. Apply a thin anti-corrosion treatment to the plating and exposed painted surfaces.
7. The engine should be in a well ventilated area, and protected from any kind of dampness.
8. Put a dust cover over the engine.
9. Check your operation manual for engine diagram and for "Manufacturer's Recommended Winterizing Procedures."

OUTBOARD ENGINE

Take it home and store it in a safe place. Be very careful storing the gas tank as the gasoline is very flammable. Refer to "Engine Manual" for specific maintenance schedule.

DEPARTURE FROM THE BOAT

The check list for leaving a boat unattended is very important because items overlooked often will not be remembered until you are far from the boat and corrective actions are impractical or impossible. Primary choices for this list are items relating to the safety and security of the unattended craft-turning off fuel valves, the proper settings for electrical switches, pumping out the bilge and leaving the switch on automatic (or arranging for periodic pumping out). Other departure check list items are securing ports, windows, hatches, and doors.

ROUTINE MAINTENANCE

Routine maintenance check lists should include items based on how much the boat is used (usually in terms of engine hours) and on calendar dates (weekly, monthly, or seasonal checks). Typical of the former are oil level checks and changes, and oil and fuel filter changes.

On a calendar basis the lists should note such matters as electrolyte levels in storage-batteries, pressure gauges on dry-chemical fire extinguishers, and all navigation lights. Check the operation of automatic bilge alarms or pump switches by running water into the boat. Periodically close and open seacocks several times to ensure their free and easy operation in case they are needed in an emergency. Equipment and supplies carried on board for emergencies should be inspected for any signs of deterioration.

5-30-96

HUNTER MARINE
LIMITED WARRANTY

The following warranties apply to all 1993 Model Year boats produced by HUNTER MARINE CORPORATION:

LIMITED ONE YEAR WARRANTY

Hunter Marine warrants to the first-use purchaser and any subsequent owner during the warranty period that any part manufactured by Hunter will be free of defects caused by faulty workmanship or materials for a period of twelve (12) months from the date of delivery to the first-use purchaser under normal use and service. During this period, Hunter will repair or replace any part judged to be defective by Hunter.

LIMITED FIVE YEAR HULL STRUCTURE AND BOTTOM BLISTER WARRANTY

Hunter warrants to the first-use purchaser and any subsequent owner during the warranty period that the hull of each boat will be free from structural defects in materials and workmanship for a period of five (5) years from the date of delivery to the first-use purchaser under normal use and service.

This limited warranty applies only to the structural integrity of the hull and the supporting pan/grid or stringer system. Hulls, pan/grid or stringers modified in any way or powered with engines other than the type and size installed or specified by Hunter are not covered by this limited warranty. The obligation of Hunter under this limited warranty is limited to the repair or replacement of hulls, that it determines to be structurally defective. This is your sole and exclusive remedy.

Hunter also warrants to the first-use purchaser and any subsequent owner during the warranty period that the boat will be free from gel-coat blistering on underwater surfaces of the hull, excluding the keel and rudder, for a period of five (5) years from the date of delivery to the first-use purchaser under normal use and service. During this period, Hunter will supply or reimburse an authorized Hunter dealer for all of the parts and labor required to repair a blistered underwater surface of the hull. The labor cost reimbursement will be based on the Labor Allowance Schedule established by Hunter from time to time, however if the repair is performed by a non-Hunter dealer, the repair cost must be authorized by Hunter in advance and be based on a reasonable number of hours as determined by Hunter. Transporation, hauling, launching, bottom paint, storage, dockage, cradling rental, rigging and derigging, or other similar costs will not be paid by Hunter. It is recommended that the repair be done during a seasonal haul out for service or storage.

The following circumstances will void the bottom blister limited warranty:

(1) If the gel-coat has been sanded, sandblasted, or subjected to abrasion or impact.

(2) If the instructions provided in the Hunter Owner's Manual are not followed according to Hunter's required bottom preparation procedures.

HUNTER MARINE
LIMITED WARRANTY

RESTRICTIONS APPLICABLE TO WARRANTIES

These limited warranties do not cover:

(1.) Paint, window glass, gelcoat, upholstery damage,plastic finishes, engines, engine parts, bilge pumps, stoves, blowers, pressure water pumps, propellers, shafts, rudders, controls, instruments, keels and equipment not manufactured by HUNTER. Any warranty made by the manufacturer of such items will be, if possible, given on to the first use purchaser.

(2.) Problems caused by improper maintenance, storage, cradling, blocking, normal wear and tear, misuse, neglect, accident, corrosion, electrolysis or improper operation.

(3) Boats used for commercial activities including charter.

THIS WARRANTY IS EXPRESSLY IN LIEU OF ANY AND ALL OTHER REMEDIES AND WARRANTIES EXPRESSED AND IMPLIED, INCLUDING THE WARRANTIES OF MERCHANTABILITY AND FITNESS. SOME STATES DO NOT ALLOW LIMITATIONS ON HOW LONG AN IMPLIED WARRANTY LASTS, SO THE ABOVE LIMITATION MAY NOT APPLY TO YOU. THE PURCHASER ACKNOWLEDGES THAT NO OTHER REPRESENTATIONS WERE MADE TO HIM OR HER WITH RESPECT TO THE QUALITY AND FUNCTION OF THE BOAT. ANY CONSEQUENTIAL DAMAGES WHICH MAY BE INCURRED ARE EXCLUDED AND PURCHASER'S REMEDY IS LIMITED TO REPAIRS OR REPLACEMENT OF ANY PART(S) JUDGED DEFECTIVE BY HUNTER. SOME STATES DO NOT ALLOW THE EXCLUSION OR LIMITATION OF INCIDENTAL OR CONSEQUENTIAL DAMAGES, SO THE ABOVE LIMITATION OR EXCLUSION MAY NOT APPLY TO YOU. THIS WARRANTY GIVES YOU SPECIFIC LEGAL RIGHTS, AND YOU MAY ALSO HAVE OTHER RIGHTS WHICH VARY FROM STATE TO STATE.

WARRANTY REGISTRATION

These limited warranties shall not be effective unless the HUNTER Warranty Registration Form and Pre-Delivery Service Record, which are furnished with each new boat, are filled out completely and returned to HUNTER within fifteen (15) days of delivery. Responsibility for sending the completed Registration Form remains with the dealer.

Return of the Warranty Registration Form to HUNTER, signed by both Dealer and Owner, is critical. Warranty coverage cannot be initiated until the completed form is received at HUNTER.

All repairs and/or replacements will be made by an authorized Hunter dealer, or at the option of Hunter, at the Hunter plant. If the repairs are of such a nature that the warranty work must be performed at the HUNTER plant, transportation costs to and from the HUNTER plant shall be paid by the owner. The labor cost reimbursement will be based on a Labor Allowance Schedule established by HUNTER and where not applicable, on a reasonable number of hours as determined by HUNTER. Any repairs and replacements must be approved in advance by an authorized HUNTER service representative.

HUNTER MARINE
LIMITED WARRANTY

TRANSFER OF LIMITED WARRANTIES

Effective with 1993 hull numbers, the limited warranties will be transferred to a subsequent purchaser of the boat if:

(1) A notice of the transfer of ownership of the boat is given by the subsequent purchaser in writing to Hunter within thirty (30) days of the transfer.

(2) The notice shall include the name, address and telephone number of the subsequent purchaser, the date of purchase, the hull number and the name of the seller of the boat.

Hunter will mail to the subsequent purchaser notice of the expiration dates of the limited warranties. (see form letter, attached) The transfer of the ownership of the boat will not extend the expiration dates of the limited warranties.

CUSTOMER SATISFACTION SURVEYS

During the first year of ownership, the first purchaser will receive two Customer Satisfaction Surveys - the first (CSS#1) will be received shortly after taking delivery and focuses on the dealer's ability to sell and commission the boat, and the Owner's initial satisfaction. The second survey (CSS#2), nine to ten months into ownership, "measures" dealer service capability and allows the owner to evaluate most of the boat's functional systems and characteristics. Both surveys are dependent upon receipt of the first purchaser's Warranty Registration Form.

What Consumer Questions Cannot Be Answered By The Hotline?

Sorry, the Hotline operator is not able to recommend or endorse specific boats or product lines; nor can the Hotline help the consumer resolve disputes with boat dealers or manufacturers about service or problems that do not involve safety.

Is Boating Safety and Consumer Information Available Only By Phone?

The Hotline is a fast and convenient way for a boater to get important safety information. But if you prefer to write for information, address your request to:

Consumer Affairs Staff (G-BC)
Office of Boating, Public, and Consumer Affairs
U.S. Coast Guard Headquarters
Washington, D.C. 20593-0001

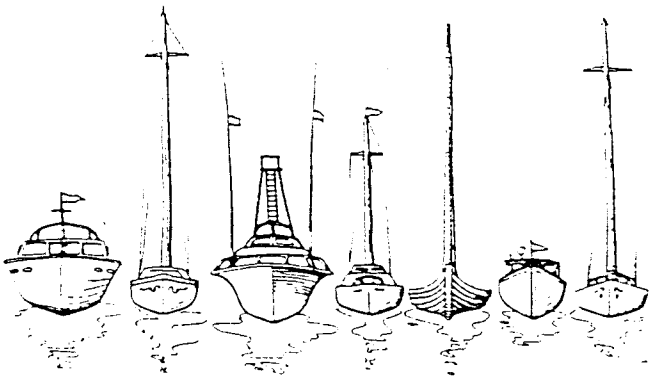

Boating Safety

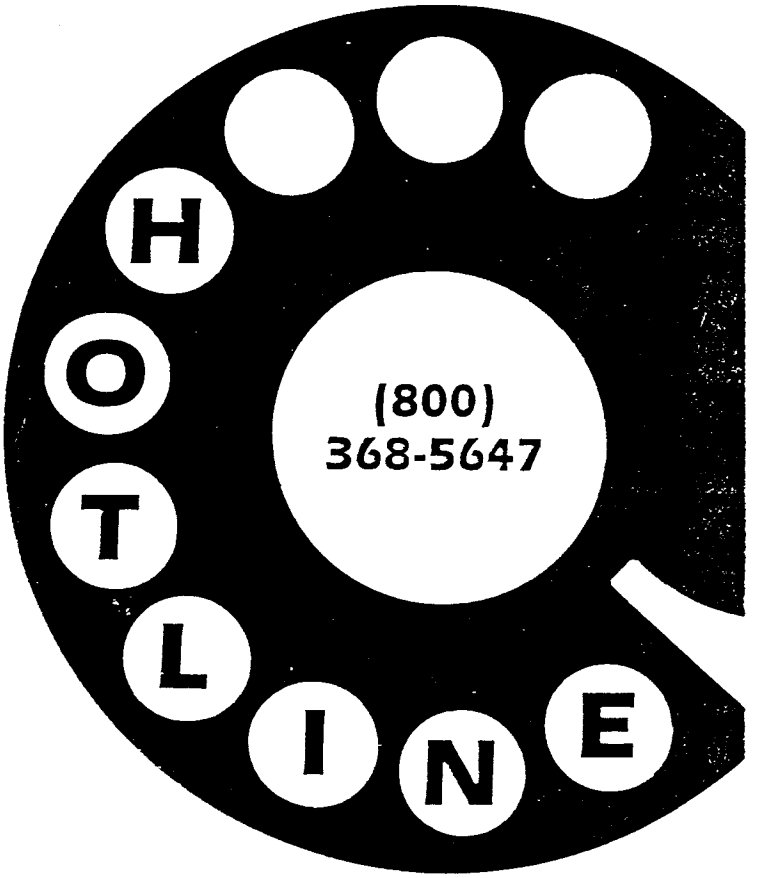

Toll-Free Access to Safety Information

U.S. Department of Transportation
United States Coast Guard

What Is The Boating Safety Hotline?

The Boating Safety Hotline is a toll-free telephone service operated by the U.S. Coast Guard in Washington, D.C. Hotline operators provide callers with information on boating safety recalls and take consumer complaints about possible safety defects. Other safety information and literature concerning recreational boating can also be obtained through the Hotline.

Who Can Use The Hotline?

Anyone with access to a telephone in the United States, including Alaska, Hawaii, Puerto Rico, and the U.S. Virgin Islands, by dialing the toll-free number:

(800) 368-5647

The number for calls from the Washington, D.C. area is 267-0780.

When Can I Call?

A Hotline operator will be on duty Monday thru Friday, 8:00 a.m. to 4:00 p.m. eastern time. If you call after hours, an answering machine will record your name and telephone number. The Hotline operator will call you back the next working day.

Will The Operator Answer All My Questions?

Hotline operators are trained to answer many questions on boating safety directly over the telephone. If the question is very technical, the operator can ask a Coast Guard specialist to call you back. Or, if the question is too complicated to answer directly over the telephone, the operator may send you written information that covers the subject. If the question deals with a topic outside of the Coast Guard's Recreational Boating Safety program, the Hotline operator will try to refer you to an office or agency that can help.

If I Have A Safety Problem With My Boat, Should I Call The Hotline?

Yes. Consumers are an important source of information used by the Coast Guard to identify safety problems in recreational boats. When you call to report a safety problem, you will be sent an owner's report form, with a postage-paid return envelope, so you can document the details of the problem. When you mail it back, the information is evaluated to determine if the problem is safety-related. If the Coast Guard concludes that the problem represents a safety defect (a defect that poses a substantial risk of injury), then the manufacturer will be asked to conduct a safety recall.

How Do I Use The Hotline To Check Safety Recall Information?

When a manufacturer conducts a safety recall, a written notice is sent to all owners informing them of the safety defect. But because it is difficult for a manufacturer to keep track of the whereabouts of every owner, it may not be possible to send the mail notice to everyone who owns the boat or engine named in a safety recall (particularly if the recall involves an older model).

So, if you're buying a used boat or engine, or even if you are the first owner of a relatively new boat or engine, and are wondering if the boat or engine has ever been involved in a safety recall, it is a simple matter to call the Hotline and find out. If the Hotline operator discovers your boat or engine has been named in a safety recall, the operator will send you information on how to go about getting the manufacturer to correct the safety defect.

SEAL OF SAFETY CHECK LIST

Do you have correct . . .

- ☐ NUMBERING
- ☐ PFD's (Life Jackets)
- ☐ FIRE EXTINGUISHERS
- ☐ VENTILATION
- ☐ BACKFIRE FLAME ARRESTER
- ☐ SOUND PRODUCING DEVICE
- ☐ NAVIGATION LIGHTS
- ☐ VISUAL DISTRESS SIGNALS
- ☐ FUEL SYSTEM
- ☐ ANCHOR WITH LINE
- ☐ PADDLE or OAR
- ☐ MANUAL PUMP or BAILER
- ☐ ELECTRICAL INSTALLATION
- ☐ GALLEY INSTALLATION

U.S. Department of Transportation
United States Coast Guard

Call the Boating Safety Hotline:

800-368-5647

(Toll Free!)

- For Boating-Safety-Recall Information.
- To Report Possible Safety Defects in Boats.
- For Answers to Boating Safety Questions.

ANSC #3027 (6-90)

COURTESY MARINE EXAMINATION

Safetee Seal says . . .

This is the Seal of Safety

Requirements For

RECREATIONAL CRAFT

COURTESY MARINE EXAMINATION U.S. COAST GUARD AUXILIARY

Your Safe Boating Should Include a CME

Make the **SEAL OF SAFETY** a part of your boat by getting a Coast Guard Auxiliary Courtesy Marine Examination. It is a free check of your boat's equipment covering federal and state safety related requirements plus additional standards recommended by the Auxiliary. The examination is conducted only with your consent. The examiners performing this service are all members of the Coast Guard Auxiliary who have been carefully trained to look for some of the more common problems which might occur in your boat or its associated safety related equipment.

If your boat meets the CME requirements, the award of the decal is your assurance that your boat is properly equipped for fun and safety on the water. Please keep this pamphlet on your boat for future reference.

At the conclusion of the examination, the copy of the check-list is given to you. A Courtesy Marine Examination is not a law enforcement activity. No report of you or your boat is ever made to any law enforcement agency. Only a statistical count of the number of examinations is made to the Coast Guard.

In addition to federal requirements, a vessel must meet the following Coast Guard Auxiliary standards for award of the Courtesy Marine Examination decal.

1. **NUMBERING:** The boat's number must be permanently attached to each side of the forward half of the vessel [the bow] and no other number may be displayed thereon. Numbers are to read left to right, be plain, vertical block characters, of a color contrasting with the background, distinctly visible and legible, and not less than 3 inches in height. A space or dash must separate letters from numbers. [FL 1234 AB]

2. **PERSONAL FLOTATION DEVICES (PFDs):** Acceptable PFDs shall be U.S. Coast Guard Approved, in good and serviceable condition, and of suitable size for the wearer. Wearable PFDs shall be readily accessible and throwable devices shall be immediately available for use.

   Boats 16 feet or longer must have one Type I, II, or III (wearable) PFD of a suitable size for each person on board and one Type IV (throwable) in each boat. A minimum of three (3) PFDs (two [2] wearable and one [1] throwable) is required regardless of the number of persons on board.

   Boats less than 16 feet in length must have one [1] Type I, II, III, or IV PFD of a suitable size for each person on board. A minimum of two [2] PFDs is required regardless of the number of persons on board.

3. **FIRE EXTINGUISHERS:** Courtesy Marine Examination requirements exceed the federal regulations by requiring that all vessels carry a minimum of one [1] B-1 fire extinguisher. Only sailboats less than 16 feet without mechanical propulsion are exempt.

   Minimum number of Coast Guard Approved, properly secured, hand portable fire extinguishers required:

Vessel Length	No-Fixed System	With Fixed System
less than 26 ft.	1-B-I	1-B-I
26 ft. to less than 40 ft.	2-B-I or 1-B-II	1-B-I
40 ft. to 65 ft.	3-B-I or 1-B-I & 1-B-II	2-B-I or 1-B-II

4. **VENTILATION:** The requirements are the same as federal regulations.

   Boats with closed engine compartments built before 1 August 1980 must have either natural or powered ventilation; those built after that date must have powered ventilation in the engine compartment.

   Boats with closed fuel tank compartments built before 1 August 1978 must have either natural or powered ventilation in the compartment; those built after that date need not have any ventilation in the fuel tank compartment provided the compartment conforms with construction standards.

   Any compartment containing portable typ

gasoline containers must be ventilated naturally or with sufficient compartment area open to the atmosphere.

5. **BACKFIRE FLAME ARRESTER:** Examination requirements are more stringent than the federal regulations. All gasoline inboard motorboats, regardless of date of construction or engine installation, must be equipped with a suitable means of backfire flame control.

6. **SOUND PRODUCING DEVICES:** For compliance with "Navigation Rules" and for distress signaling purposes, all boats must carry some type of sound producing device (whistle, horn, siren, etc.) capable of a 4-second blast audible for a half mile.

7. **NAVIGATION LIGHTS:** Boats 16 feet or more in length, MUST have properly installed and working navigation lights, and an all-around anchor light to receive this decal. NOTE: Federal law requires ALL boats to be able to display lights between sunset and sunrise.

8. **VISUAL DISTRESS SIGNALS:** All recreational boats used on coastal waters, Great Lakes or the high seas, are required to carry Coast Guard Approved Visual Distress Signals in order to qualify for the CME decal.

For vessels operating on inland waters, the Auxiliary requires some means of making a suitable day and night visual distress signal. The type device and the amount carried is best judged by taking into account the size of the area and the conditions under which the boat will be operating. Recommended equipment could include one or more of the following:

NIGHT	DAYLIGHT
Strobe Light	Signal Mirror
Flashlight	Red or Orange Flags
Lantern	

COURTESY MARINE EXAMINATION REQUIREMENTS THAT HAVE NO CORRESPONDING FEDERAL REGULATIONS

9. **FUEL SYSTEMS:** Portable fuel tanks [7 gallon capacity or less] must be constructed of sturdy non-breakable material and in safe condition. Tanks shall be free of excessive corrosion and must not leak. Any vents must be capable of being closed and the tank must have a vapor-tight, leak-proof cap. All tanks must be properly secured in the boat to prevent excessive movement.

Permanent fuel tanks [over 7 gallon capacity] and fuel lines must be free of excessive corrosion and not leak. Fuel Tanks must be secured and grounded. The fuel fill pipe must be tightly fitted to the fill plate and located outside of a closed compartment, where any spilled fuel will be directed overboard. A vent terminating outboard of the hull and compartments must lead to each permanent fuel tank.

10. **ANCHOR AND ANCHOR LINE:** The boat must be equipped with an adequate anchor and line of suitable size and length for locality.

11. **ALTERNATE PROPULSION:** All boats less than 16 feet in length must carry a second method of propulsion. A paddle, oar or other suitable device meets this requirement. If an alternate means of mechanical propulsion is carried [another outboard or trolling motor], it must use a separate fuel and starting source from the main propulsion motor.

12. **DEWATERING DEVICE:** All boats must carry at least one effective manual dewatering device [bucket, can, scoop, etc.]. This requirement is in addition to any installed electrical bilge pump that the vessel may have on board.

An installed electrical or mechanical bilge pump is not a requirement for award of the CME decal; however, if such a pump is installed it must be in satisfactory operating condition.

13. **GENERAL CONDITION [Seaworthiness]:** The boat must be free from fire hazards, in good overall condition with the bilges reasonably clean and the visible hull and structure generally sound.

The maximum person capacity and horsepower must not be exceeded.

GALLEY EQUIPMENT: Appliances and their fuel tanks must be properly secured, and the system must not leak [no odor of fuel must be detected when the system is turned on].

There must be no flammable material in the vicinity of stoves or heaters.

Adequate ventilation must be provided for appliances and their fuel supply.

Appliance fuel shut off valves must be readily accessible.

Only common appliance fuels must be used on vessels. Gasoline, Naptha, or Benzene are not allowed due to their highly volatile nature.

ELECTRICAL: Wiring must be in good condition and properly installed. No exposed areas or deteriorated insulation is permitted.

The electrical system must be protected by fuses or manual resetting circuit breakers. Switches and fuse panels must be protected from rain or spray.

Batteries must be secured to prevent movement and the terminals covered to prevent accidental arcing.

14. **STATE REQUIREMENTS:** State equipment requirements that pertain to basic safety and expand CME requirements [such as flashlights, number of fire extinguishers, etc.] will be checked by the Auxiliary courtesy examiner and must be met before the CME decal can be awarded. THE BOAT WILL BE CHECKED AGAINST THE REQUIREMENTS OF THE STATE WHERE THE "CME" IS BEING CONDUCTED. The boat owner/operator should take this opportunity to gather information from the Courtesy Examiner about any special state operating or equipment requirements.

OTHER FEDERAL REQUIREMENTS:

Note: These items are required by Federal Law but are not needed for the award of the COURTESY MARINE EXAMINATION decal.

MANUFACTURER CERTIFICATION OF COMPLIANCE:

Only boats and associated equipment that are subject to a federal standard are required or allowed to display a manufacturer's certification of compliance label. Each certification label must contain the name and address of the manufacturer, and the words, "This (boat or equipment) complies with the U.S. Coast Guard safety standards in effect on the date of certification."

OILY WASTE DISCHARGES:

Federal law requires all vessels 26 feet and over to display the following "Oily Waste Discharge Placard" in the engine compartment or by the fuel pumping station.

Discharge of Oil Prohibited

The Federal Water Pollution Control Act prohibits the discharge of oil or oily waste into or upon, or discoloration of the surface of the water, or causes a sludge of emulsion beneath the surface of the water. Violators are subject to a penalty of $5,000.

HULL IDENTIFICATION NUMBER: (HIN)

A hull identification number must be displayed on all recreational boats the construction of which began after 31 October 1972. The number consists of 12 characters, no less than one-fourth of an inch in height, and must be affixed to the outboard side of the transom or, if there is no transom, to the outermost starboard side of the end of the hull that bears the rudder or steering mechanism. The HIN must be affixed above the waterline of the boat in such a way that alteration, removal, or replacement would be obvious and evident.

REGISTERED BOATS:
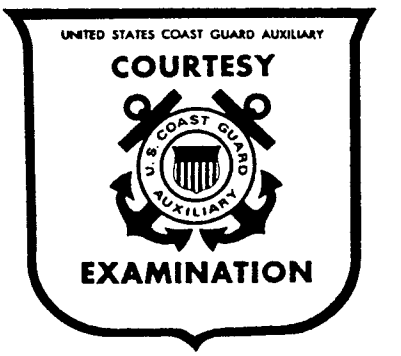
Federal Law requires all vessels propelled by machinery (with the exception of racing vessels and tenders under 10 HP) to be registered with the state of principal use, if that state has an approved numbering system, or with the Coast Guard. Some states have registration requirements that differ from or exceed those above. Check with the state agency responsible for boat registration for any differences in your area. Federal law requires the registration certificate to be on board whenever the boat is in use.